ITDS231
Lecture 5.2

Data Link Layer (Review)
Flow and Error Control
HDLC

Asst. Prof. Dr. Thitinan Tantidham

Some slides from
- ITCS323/2021s1
- NETACAD Network Essentials/ITN7.02

มหาวิทยาลัยมหิดล
Mahidol University

ห้ามมิให้นักศึกษาทำซ้ำ ดัดแปลง หรือใช้ประโยชน์จากงานอันมีลิขสิทธิ์ปรากฏอยู่ในระบบการศึกษาอิเล็กทรอนิกส์ (E-Learning) ของมหาวิทยาลัย ไม่ว่าจะทั้งหมดหรือบางส่วน โดยไม่ได้รับอนุญาตจากมหาวิทยาลัย นอกเหนือจากการศึกษาส่วนบุคคล ทั้งนี้ การทำซ้ำ ดัดแปลง หรือเผยแพร่ต่อสาธารณชนซึ่งงานอันมีลิขสิทธิ์ **จะมีโทษปรับตั้งแต่ 20,000 บาท ถึง 200,000 บาท และหากเป็นการกระทำเพื่อการค้า จะมีโทษจำคุกตั้งแต่ 6 เดือน ถึง 10 ปี หรือปรับตั้งแต่ 100,000 บาท ถึง 800,000 บาท หรือทั้งจำทั้งปรับ**

Unless allowed by Mahidol University, the User shall not copy, modify, or exploit in part or in whole of the copyrighted materials on the Platform, other than for your own individual study. The copy, modify or communication to public of the copyrighted materials shall be inflicted with a fine from 20,000 Baht up to 200,000 Baht. If the offence is committed with the commercial purpose, the offender shall be inflicted with imprisonment for a term from 6 months up to 10 years or a fine from 100,000 Baht up to 800,000 Baht or both imprisonment and fine.

Review: Data Link Layer

Review: The Data Link Layer

Purposes

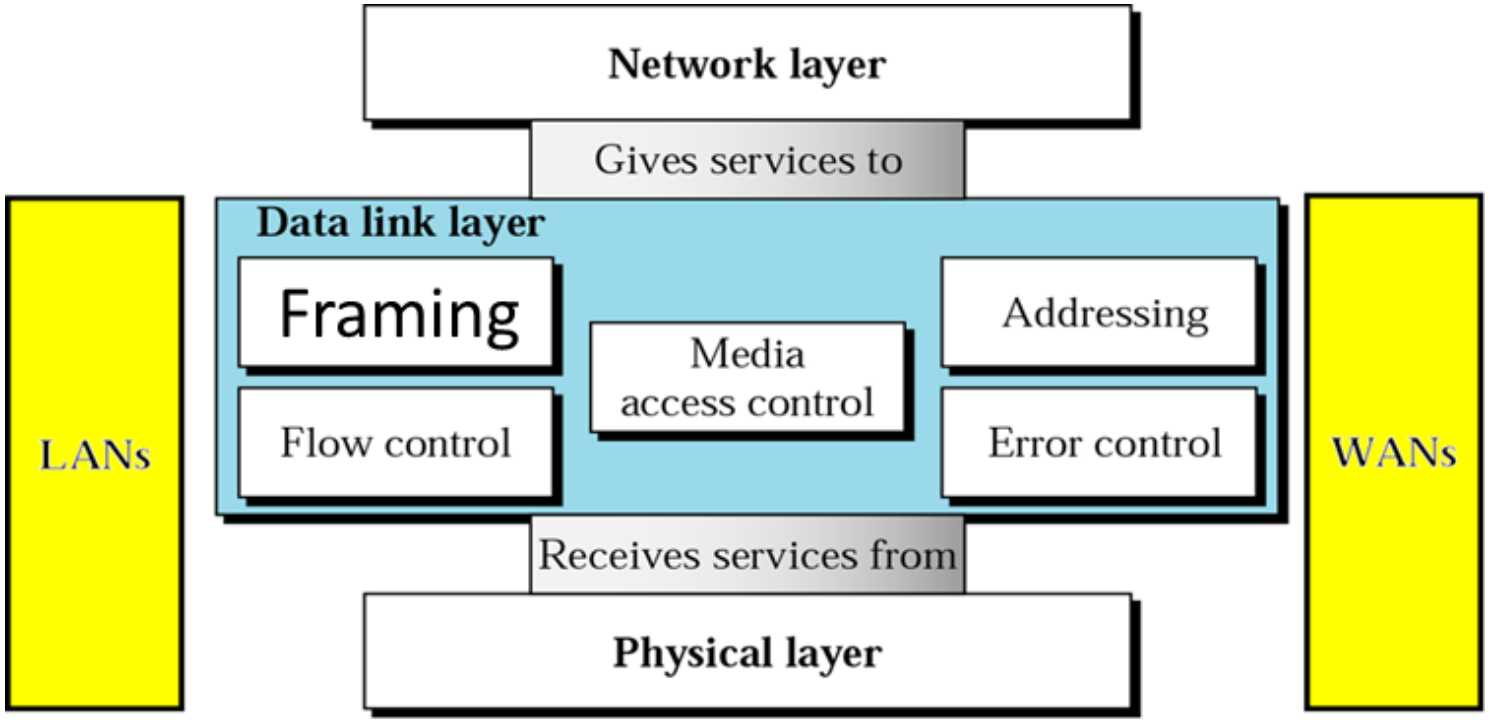

Framing

Some slides from
- ITCS323/2021s1
- NETACAD Network Essentials/ITN7.02

Framing

- In computer data communication, all communication involves digital data.
  - The physical layer provides bit synchronization to ensure that the sender and receiver use the same bit durations and timing.
- The data-link layer needs to pack bits into frames, so that each frame is distinguishable from another.
- Each frame is organized or formatted into compartments based on the HDLC format (syntax and semantic).

- **Analogy**: The simple act of inserting a letter into an envelope separates one piece of information from another; the envelope serves as the delimiter.

Framing

Ref: https://www.open-std.org/cen/tc304/guidecharactersets/guideannexa.html

There are **two types of framing**

- **Character-oriented** (or byte-oriented) framing

  e.g. Serial communication protocols: e.g. UART, I2C, SPI, PPP, Modbus, Bisync

  ✓ Data to be carried are 8-bit characters from a coding system such as ASCII

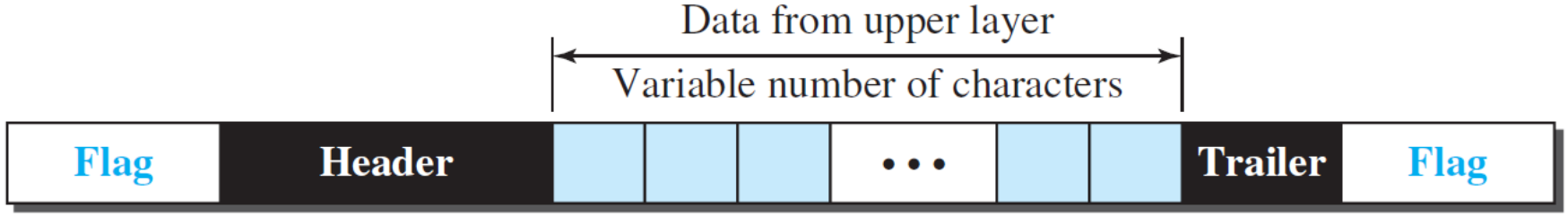

- **Bit-oriented framing**

  e.g. HDLC, SDLC, CAN (Controller Area Network), Frame Relay, ATM, X25

Data section of a frame is a sequence of bits to be interpreted by the upper layer as text, graphic, audio, video, and so on.

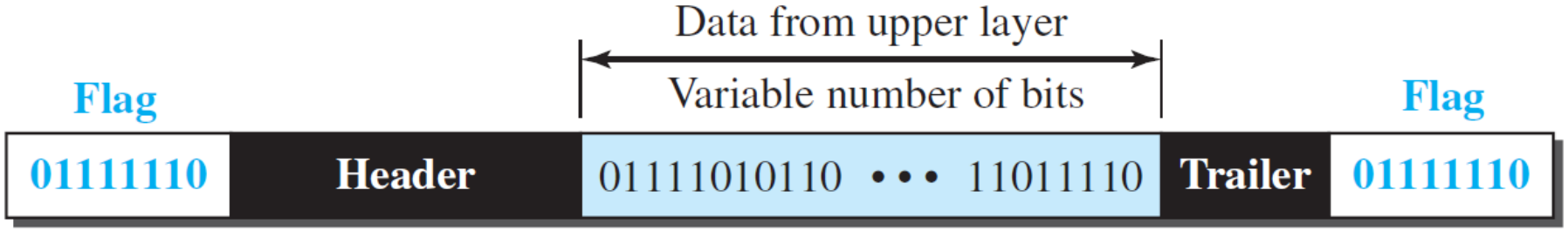

$00	NUL	$20	SP	$40	@	$60	`
$01	SOH	$21	!	$41	A	$61	a
$02	STX	$22	"	$42	B	$62	b
$03	ETX	$23	#	$43	C	$63	c
$04	EOT	$24	$	$44	D	$64	d
$05	ENQ	$25	%	$45	E	$65	e
$06	ACK	$26	&	$46	F	$66	f
$07	BEL	$27	'	$47	G	$67	g
$08	BS	$28	(	$48	H	$68	h
$09	HT	$29	)	$49	I	$69	i
$0A	LF	$2A	*	$4A	J	$6A	j
$0B	VT	$2B	+	$4B	K	$6B	k
$0C	FF	$2C	,	$4C	L	$6C	l
$0D	CR	$2D	-	$4D	M	$6D	m
$0E	SO	$2E	.	$4E	N	$6E	n
$0F	SI	$2F	/	$4F	O	$6F	o
$10	DLE	$30	0	$50	P	$70	p
$11	DC1	$31	1	$51	Q	$71	q
$12	DC2	$32	2	$52	R	$72	r
$13	DC3	$33	3	$53	S	$73	s
$14	DC4	$34	4	$54	T	$74	t
$15	NAK	$35	5	$55	U	$75	u
$16	SYN	$36	6	$56	V	$76	v
$17	ETB	$37	7	$57	W	$77	w
$18	CAN	$38	8	$58	X	$78	x
$19	EM	$39	9	$59	Y	$79	y
$1A	SUB	$3A	:	$5A	Z	$7A	z
$1B	ESC	$3B	;	$5B	[	$7B	{
$1C	FS	$3C	<	$5C	\	$7C	|
$1D	GS	$3D	=	$5D	]	$7D	}
$1E	RS	$3E	>	$5E	^	$7E	~
$1F	US	$3F	?	$5F	_	$7F	DEL

Byte or Character-Oriented Framing

- This is also called byte-oriented framing.
- Data to be carried are 8-bit characters from a coding system such as ASCII

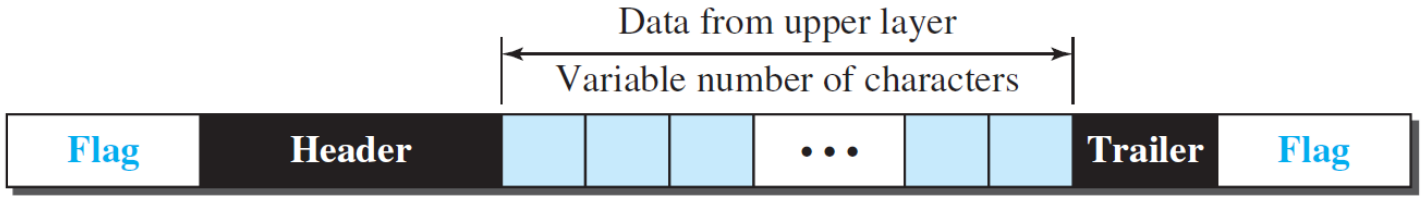

- Used when only text was exchanged by the data-link layers.
- **Limitations**
  - ✓ If characters were used, sending other forms of data **(such as graphics, audio, and video) is problematic.**
  - ✓ If a pattern is used in the flag (a specific set of characters), **if the same pattern appears in the data**, escape character (**ESC**) must be used to make sure that the flag pattern found in the data is not a flag. This is called **byte stuffing**.
  - ✓ The universal coding systems in use today, such as Unicode, have 16-bit and 32-bit characters that conflict with 8-bit characters.

Byte Stuffing

PPP

- Byte stuffing is used in order to make sure that the **flag pattern found** in the data **is not read as control flag**.

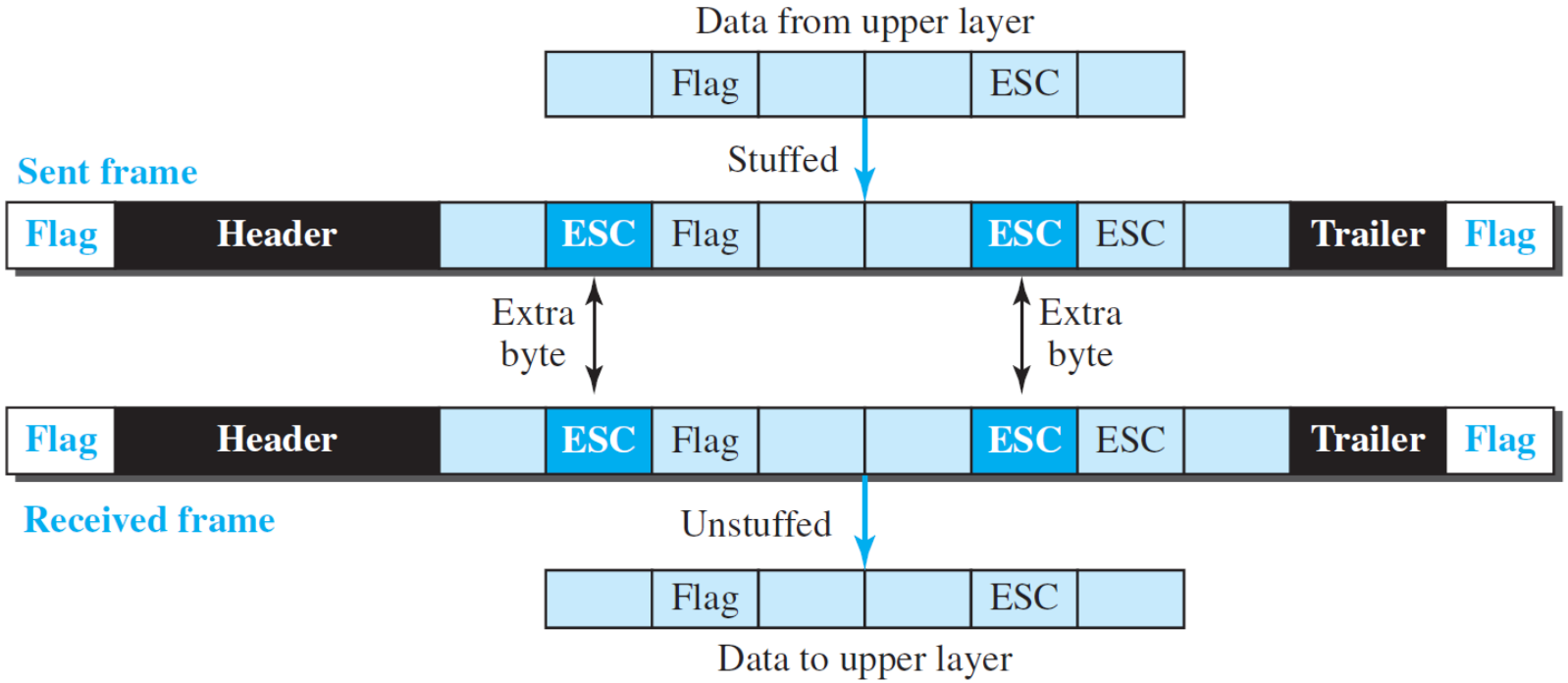

Byte stuffing is the process of adding one extra byte whenever there is a flag or escape character in the text.

Bit Oriented & Bit Stuffing

HDLC

- Bit stuffing is used in order to make sure that the **flag pattern found in the data is not** read as control flag.

Flag
= 0x7E
= 01111110

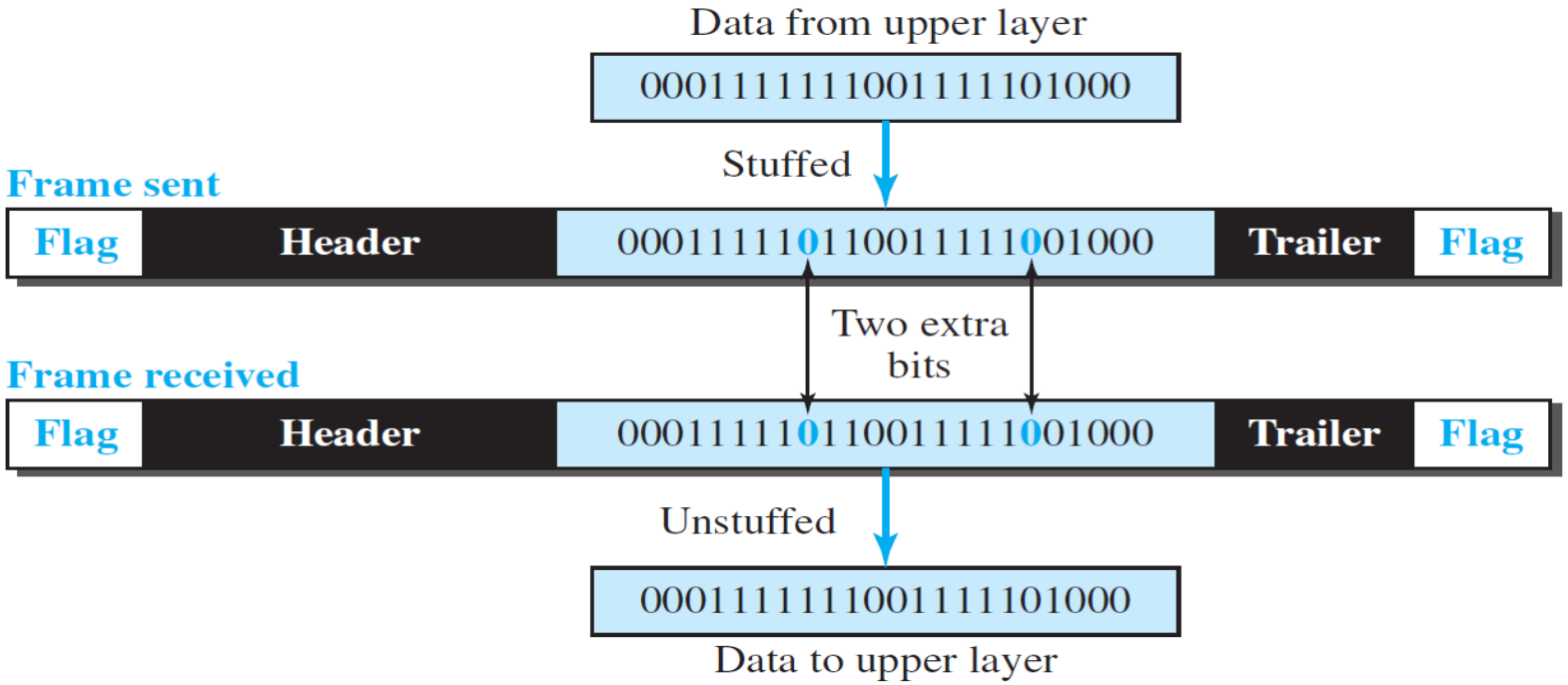

Bit stuffing is the process of adding one extra 0 whenever five consecutive 1s follow a 0 in the data, so that the receiver does not mistake the pattern 0111110 for a flag.

Framing

Feature / Protocols	Byte-Oriented	Bit-Oriented	Frame-Oriented
Framing Method	Control bytes + escaping	Bit patterns + bit stuffing	Length/Preamble fields
Example Protocols	PPP, SLIP, BISYNC, UART, I^2C, SPI	HDLC, CAN, Frame Relay	Ethernet, 802.11, ATM
Stuffing Used?	Byte stuffing	Bit stuffing	None (maybe padding)
Complexity	Simple	Medium	Higher (structured frames)
Efficiency	Lower (escaping overhead)	Lower (extra bits inserted)	Higher (no stuffing)

Flow Control

Some slides from
- ITCS323/2021s1
- NETACAD Network Essentials/ITN7.02

Flow Control

- Whenever an entity produces items (sender) and another entity consumes them (receiver), there should be **a balance between production and consumption rates**.
  - ✓ If the items are produced faster than they can be consumed, the consumer can be overwhelmed and may need to discard some items.
  - ✓ If the items are produced more slowly than they can be consumed, the consumer must wait, and the system becomes less efficient.

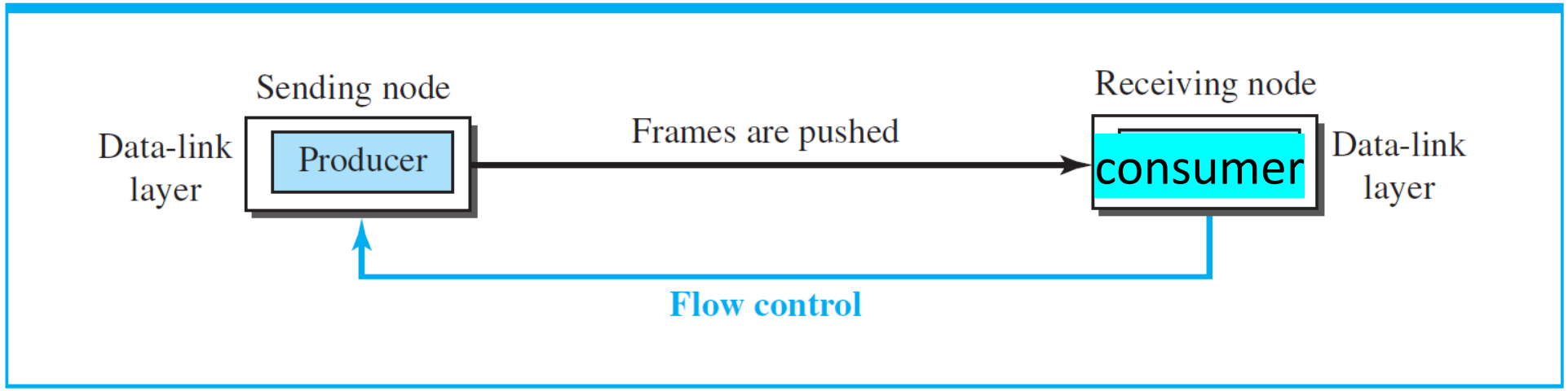

Buffers

- In order to alleviate the issue of overflows, the sender and receiver use buffer as a temporary storage to hold data before actually sending and receiving.

- Error control plays a key role in flow control and buffer management.
  - ✓ The receiver puts data in the receiving buffers in order to determine whether it can actually receive the valid data.
  - ✓ The sender puts data in the sending buffers to determine whether it can send more data to the receiver.

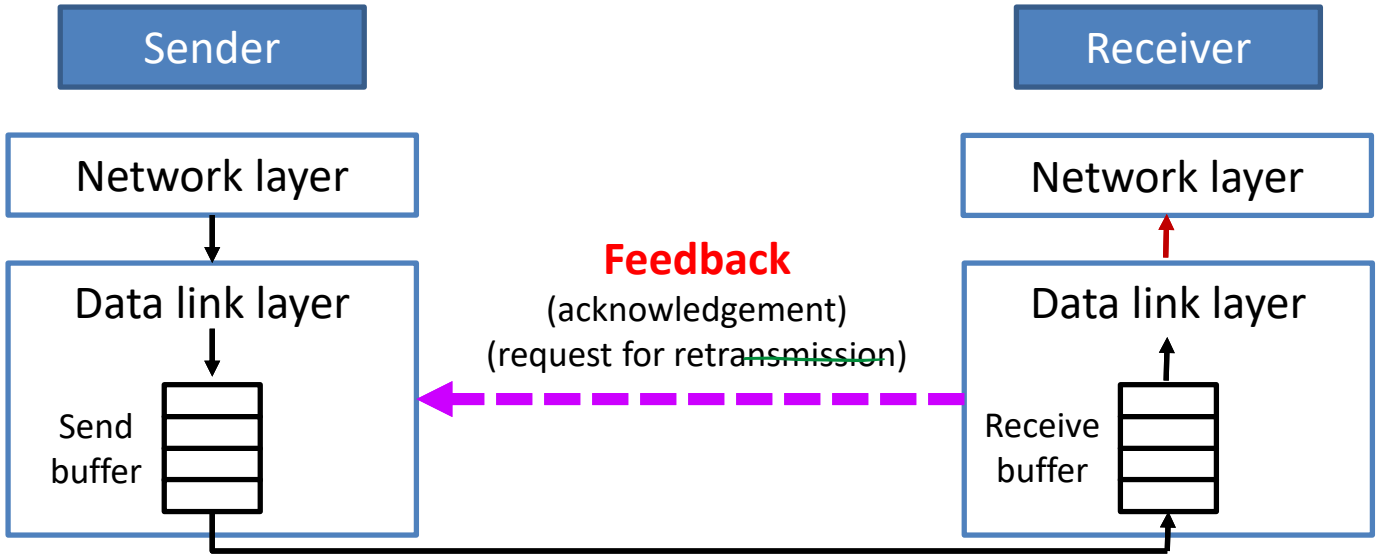

Connectionless vs Connection-oriented

- **Connectionless protocol**
  - The sending machine sends independent frames to the receiving machine.
  - No logical connection is set up between the host machines.

- **Connection-oriented protocol**
  - **A logical connection should first be established** between the two nodes (setup phase).
  - The receiver needs to wait until all frames belonging to the same set are received and then deliver them in order to the network layer.
  - Rare in data link protocols, but used in the transport layer (TCP).

- HDLC provides both connection-oriented and connectionless service.

Flow Control Protocols

- Simple
- Stop-and-Wait
- Go-Back-N
- Selective-Repeat

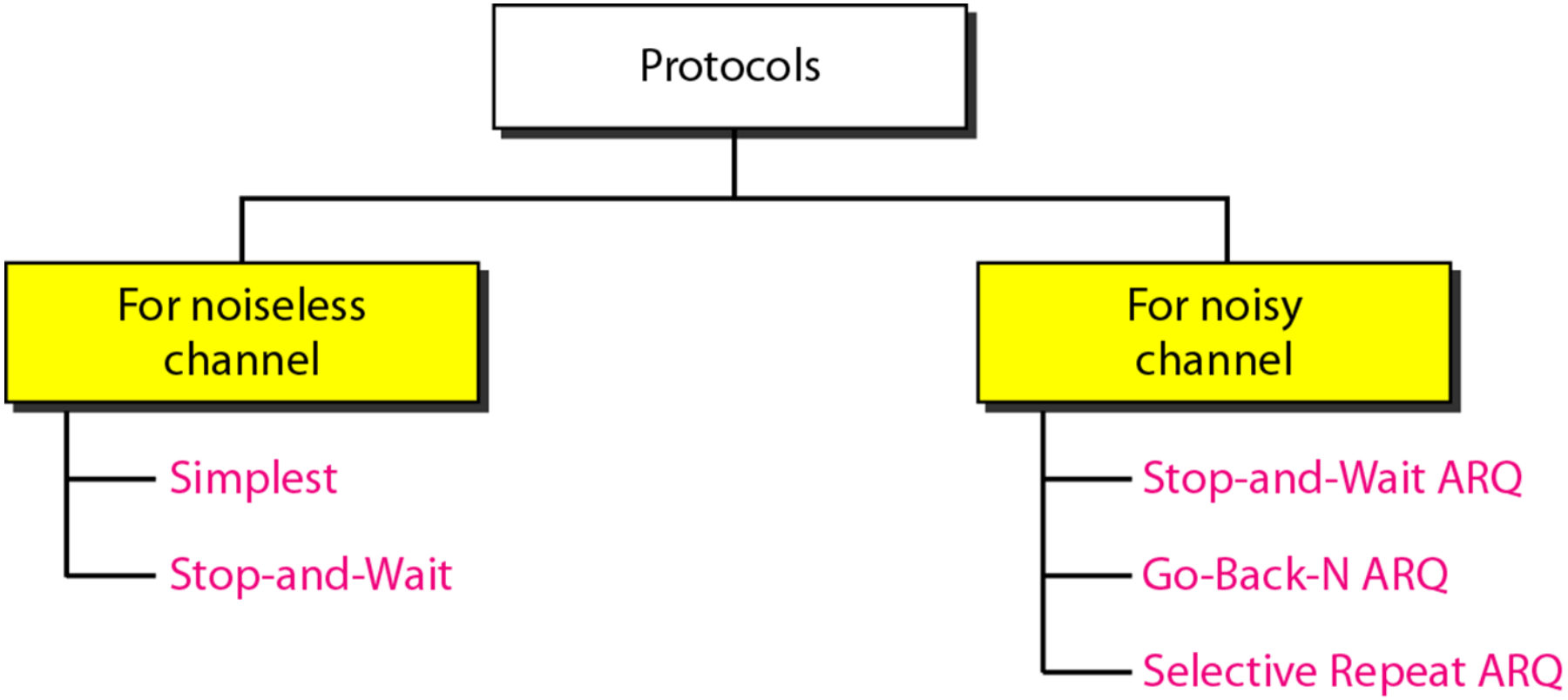

Finite State Machine (FSM) -1/2

- Finite State Machine (FSM) explains the synchronization part of a protocol

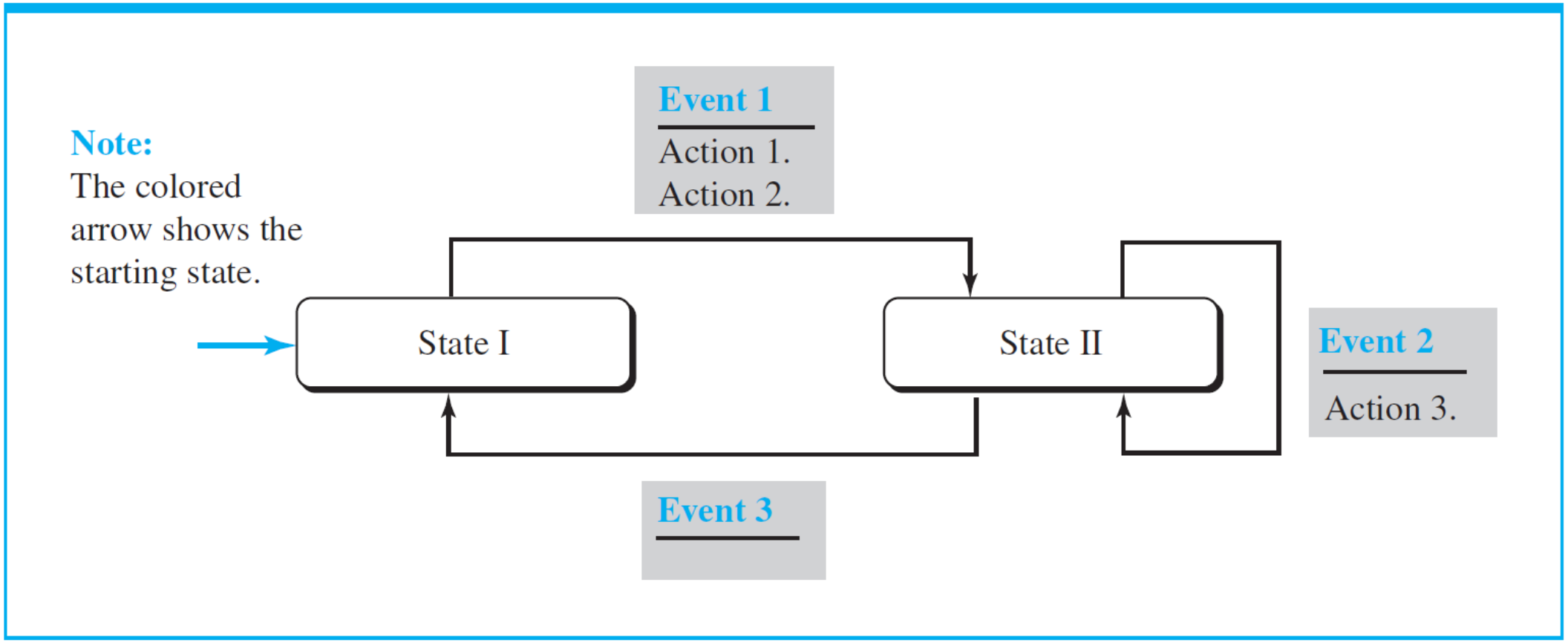

Finite State Machine (FSM) -2/2

- An FSM is thought of as a machine with a finite number of states.
- The machine is always in one of the states until an event occurs.
- Each event is associated with two reactions: defining the list (possibly empty) of actions to be performed and determining the next state (which can be the same as the current state).
- One of the states must be defined as the initial state, the state in which the machine starts when it turns on.
- We use rounded-corner rectangles to show states, colored text to show events, and regular black text to show actions.
  - ✓ A horizontal line is used to separate the event from the actions, although later we replace the horizontal line with a slash.
  - ✓ The arrow shows the movement to the next state.

Simple Protocol

- Simple protocol doesn't have any flow nor error control.

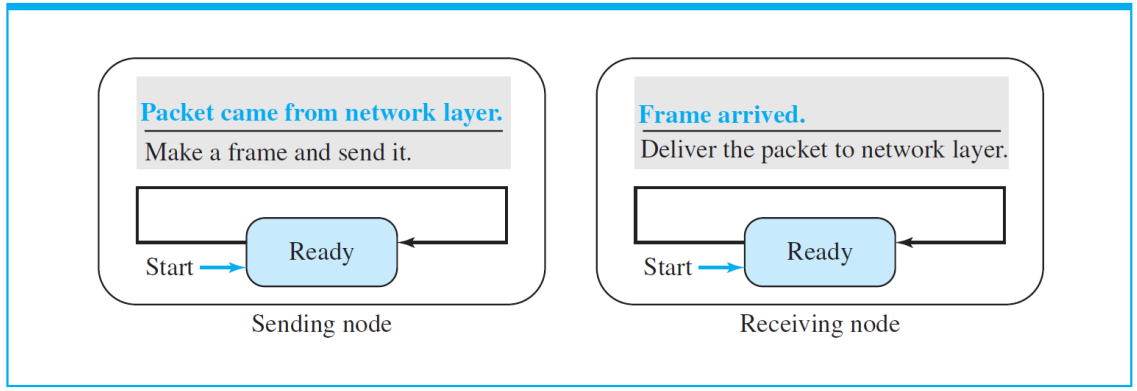

Time-sequence flow Diagram

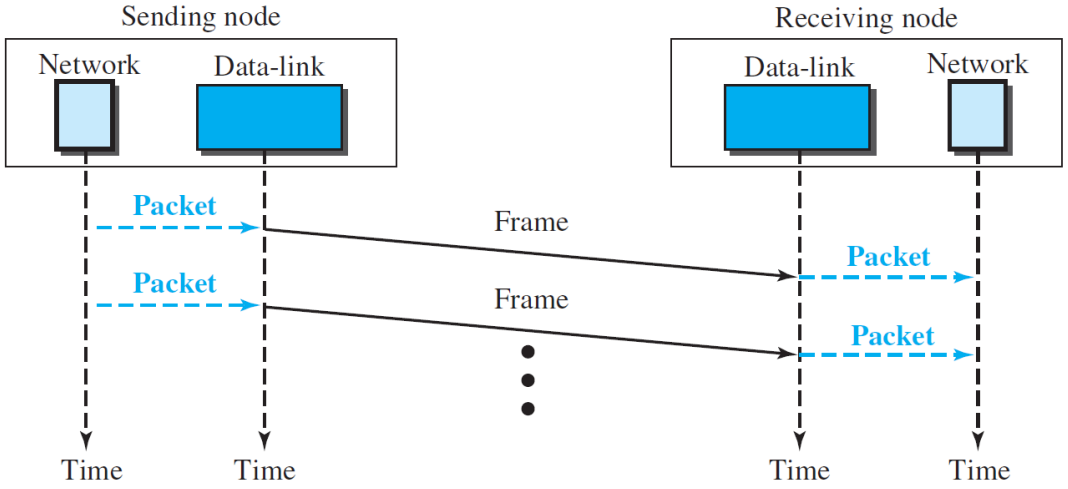

Stop-and-Wait ARQ Protocol

- Stop-and-Wait ARQ is the simplest flow and error control mechanism
- The sender sends one frame at a time and waits for an acknowledgment from a receiver (who checks the data for error – usually CRC is used) before sending the next one.
  - ✓ The sending device keeps a copy of the last frame transmitted until it receives an acknowledgement(ACK) for that frame.
    - If the data received is not in error, the receiver sends an acknowledgement
    - If the data received is in error, the receiver does not send an acknowledgement (no ACK), it simply discards the frame and wait for the timer at the sender side to time out, which triggers retransmission.

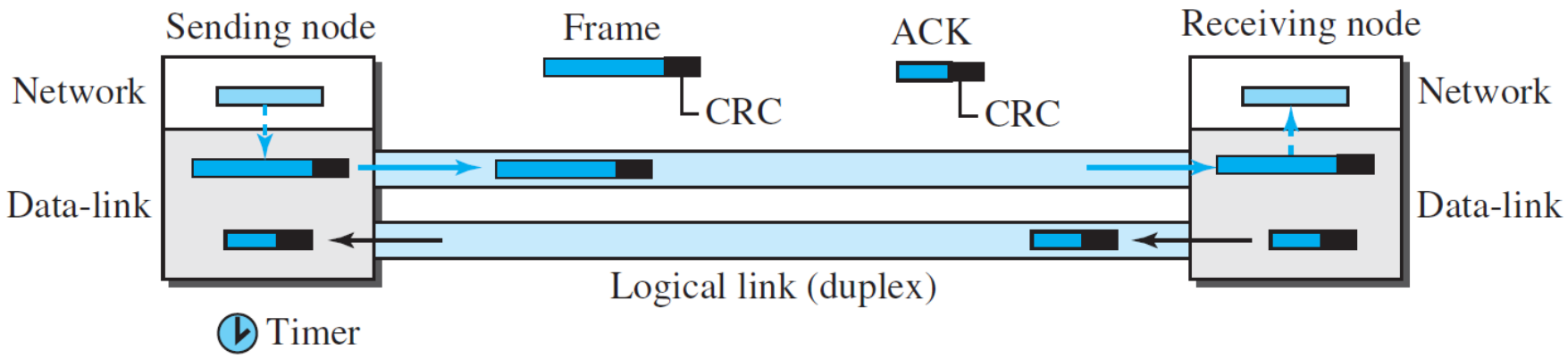

Stop-and-Wait ARQ Protocol

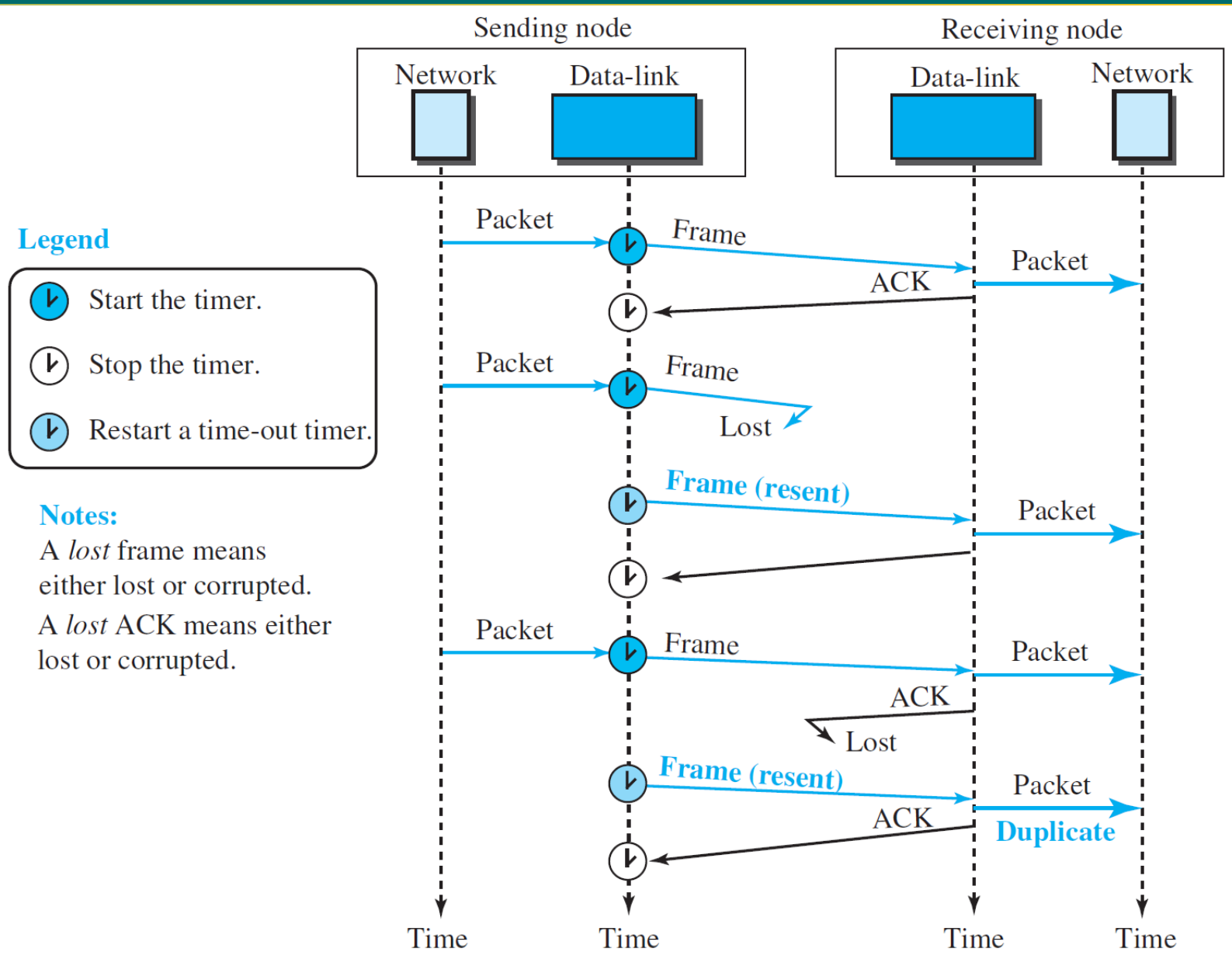

Stop-and-Wait ARQ Protocol

Sequence and Acknowledgement Numbers

- In order to retransmit the frames not yet acknowledged, an identifier (frame number) is necessary.
- In this protocol, the frame sequence number is very simple. Just 0 and 1 to distinguish between a frame and the subsequent frame.
  - ✓ Example: the frames are sent as 0, 1, 0, 1, 0, 1, …
- The sender has a control variable, which we call **S**, that holds the number of the recently sent frame (0 or 1)
- The receiver has a control variable, which we call **R,** that holds the number of the next frame expected (0 or 1)

- The receiver sends only positive ACK for frames received safe and sound

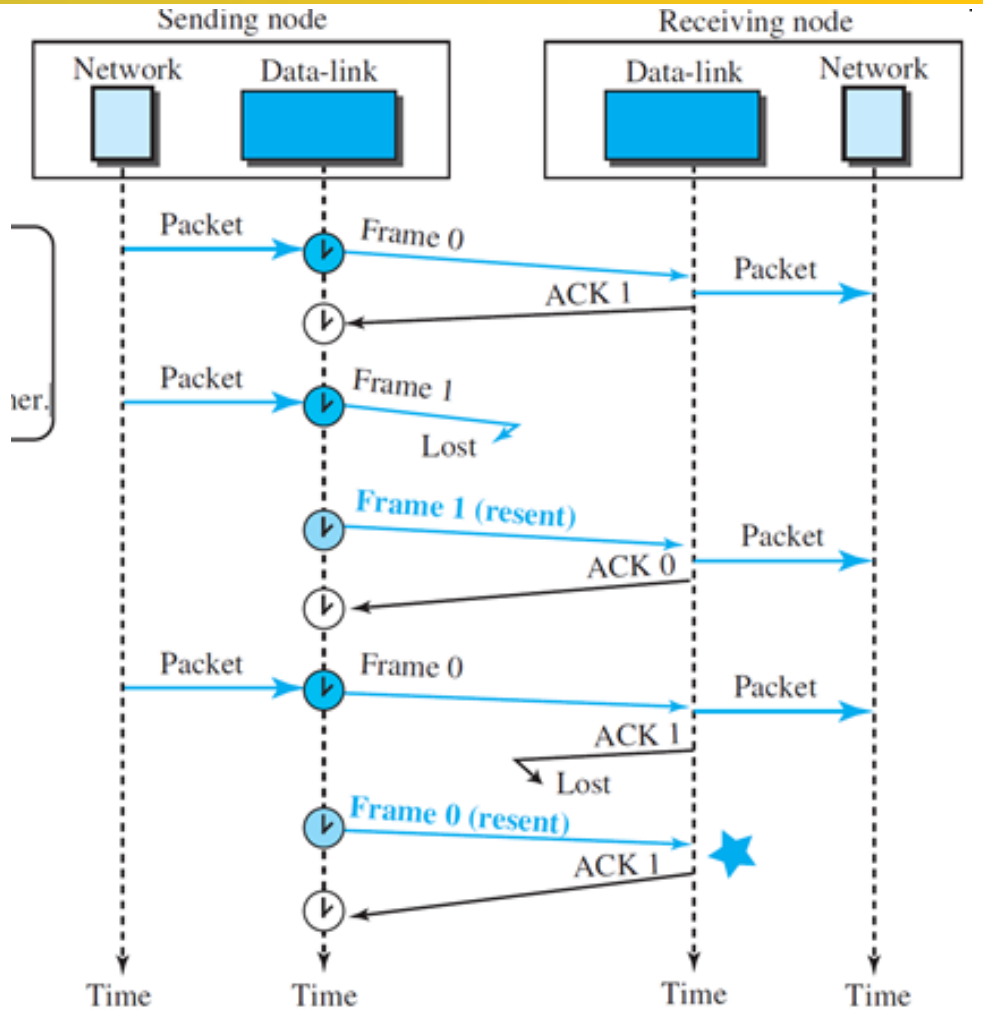

Stop-and-Wait ARQ Protocol

Normal Operation

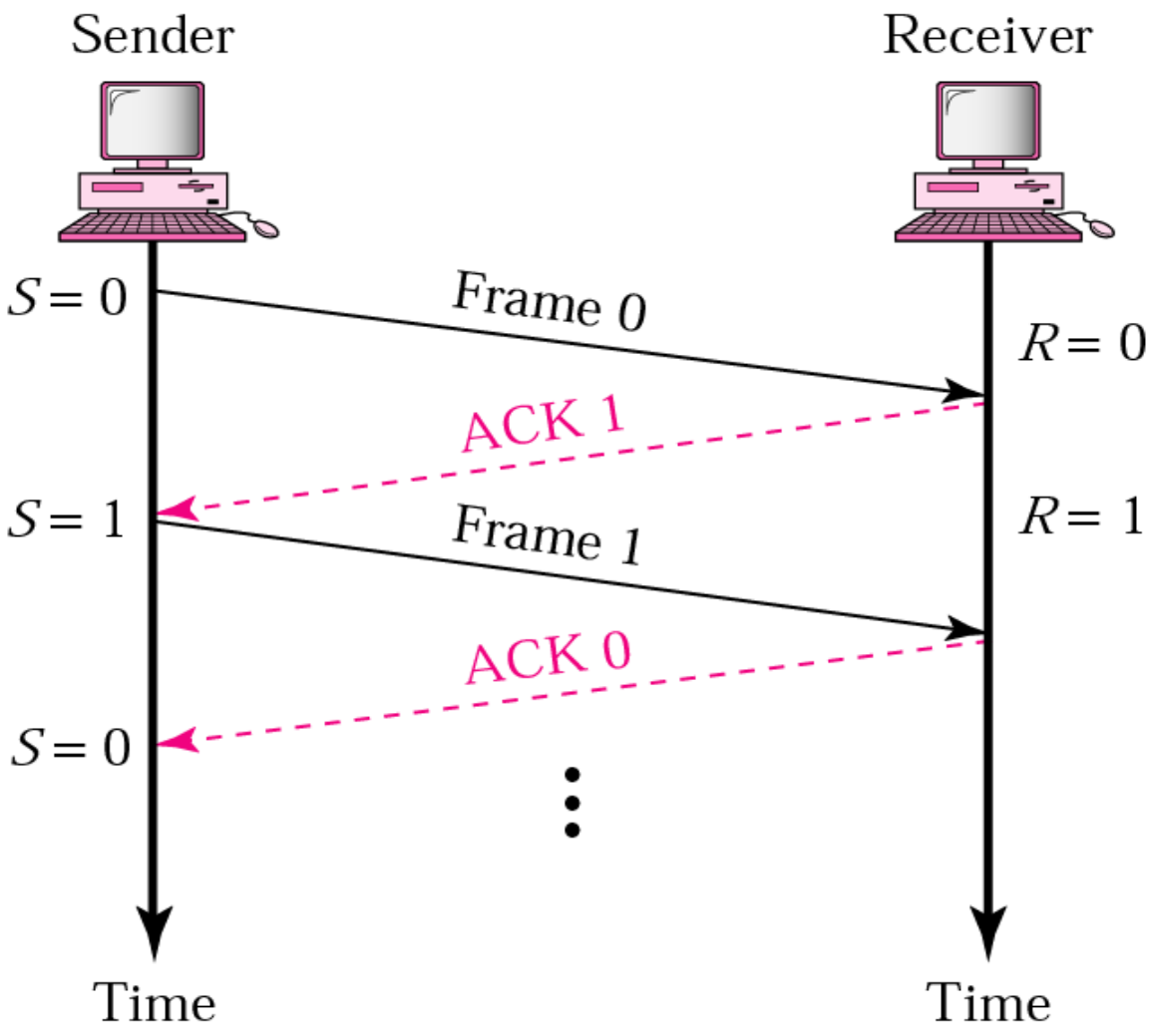

Stop-and-Wait ARQ Protocol

Lost Frame

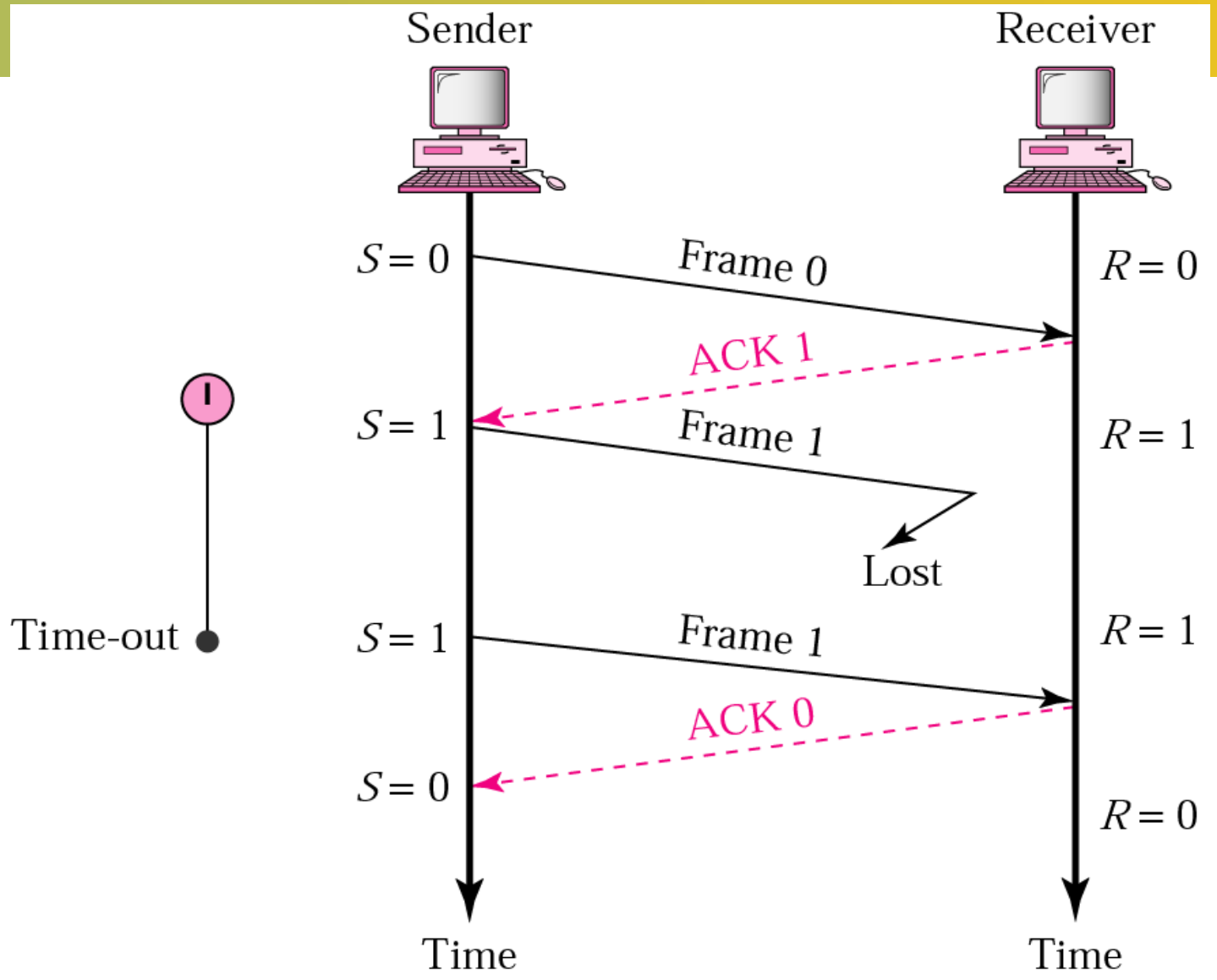

Stop-and-Wait ARQ Protocol

Lost ACK Frame

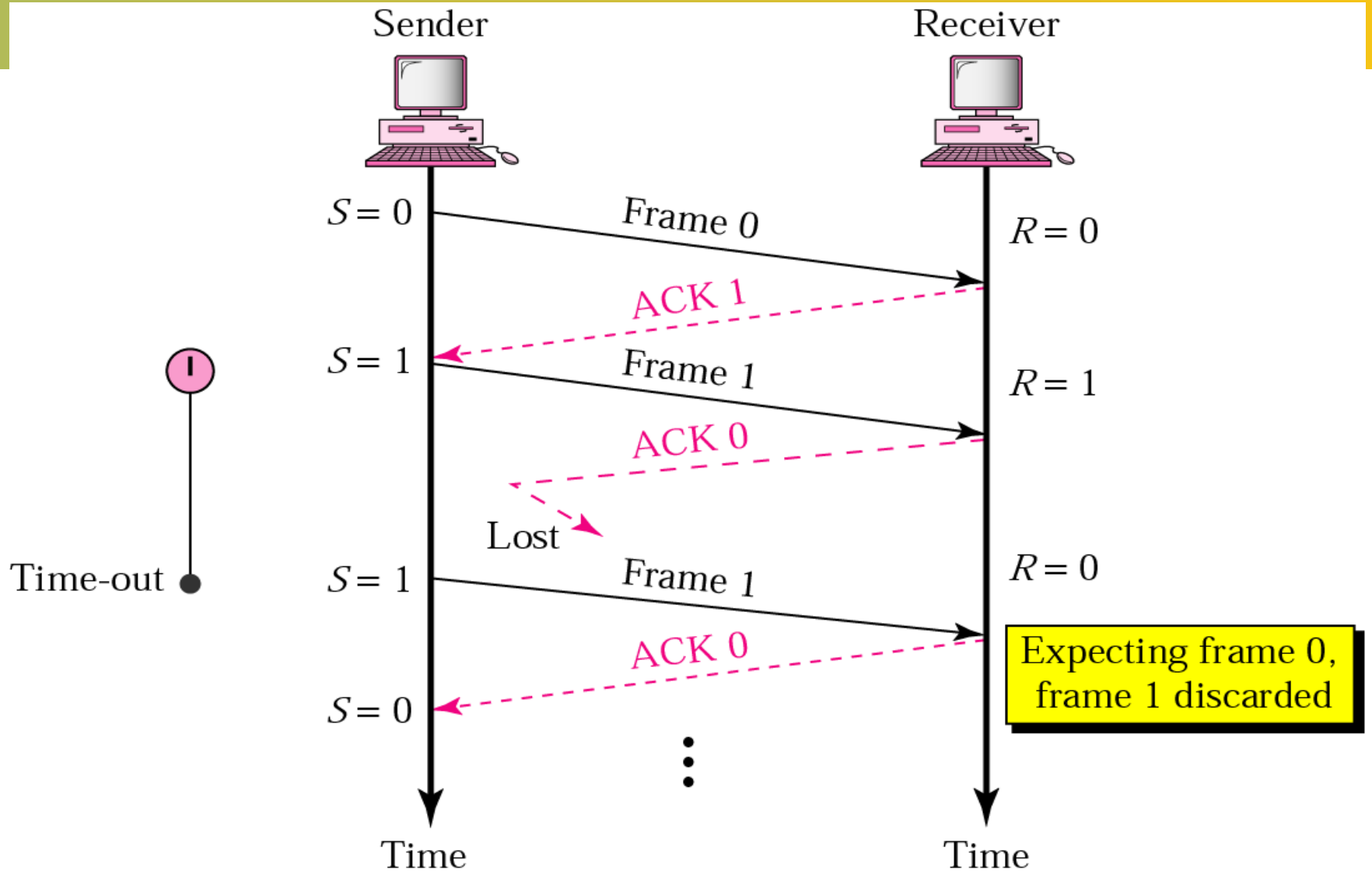

Stop-and-Wait ARQ Protocol

Delayed ACK

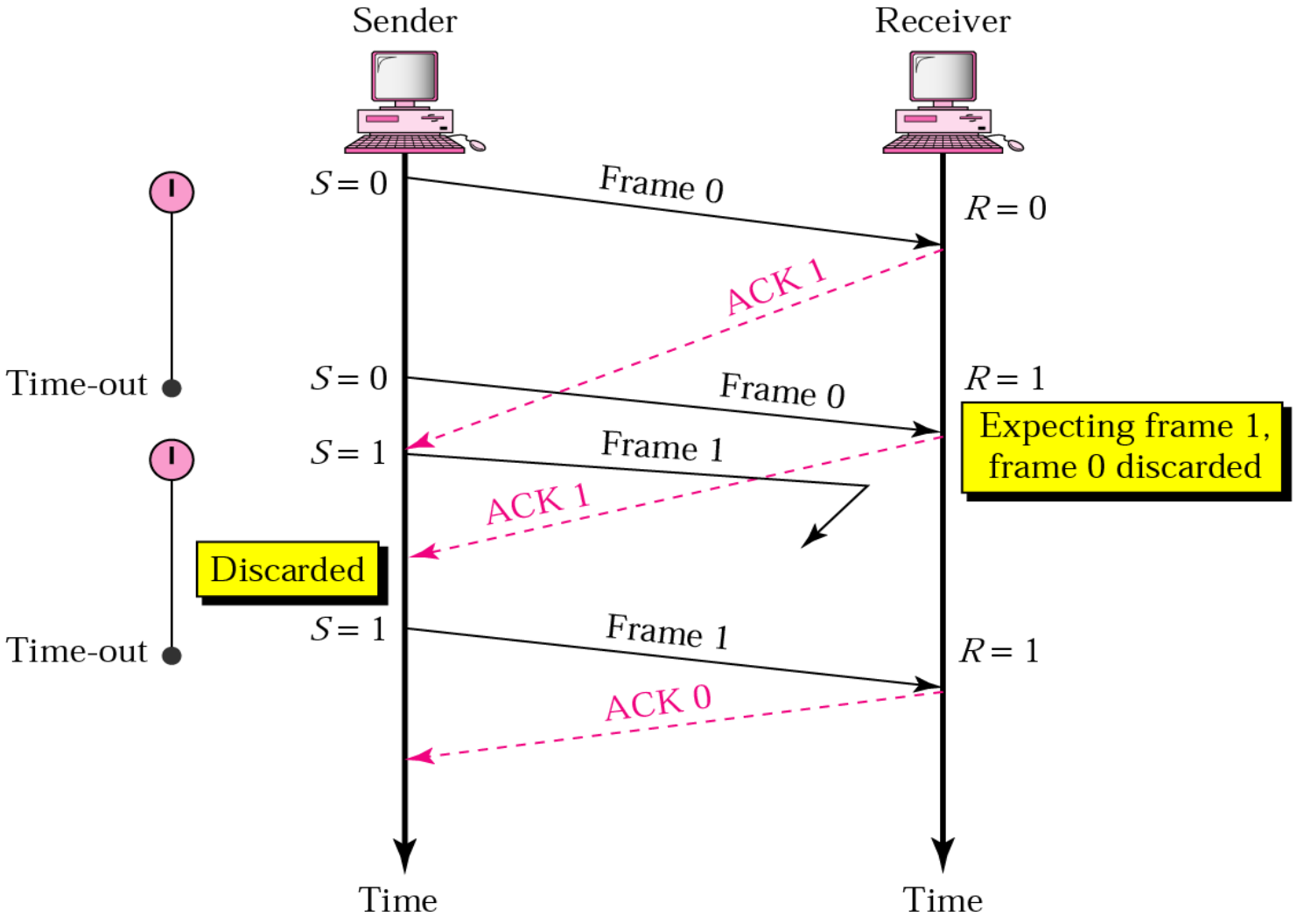

- In Stop-and-Wait ARQ, numbering frames prevents the retaining of duplicate frames at the receiver side.

- Without ACK number, the sender may mistakenly accept the delayed ACK for the last frame sent
- Numbered acknowledgments are needed if an acknowledgment is delayed and the next frame is lost at the sender side.

.

Stop-and-Wait ARQ Protocol

Bidirectional Transmission

- The stop-and-wait mechanism was originally designed for unidirectional (at any moment in time).
  - Howerver, One party will have to take either the sender or receiver role.

- We can have bidirectional transmission (a party can be both sender and receiver at the same time).
  - The two parties need to have two separate channels for full-duplex transmission or half-duplex transmission could be used.

Pickybacking

- If the communication is **bi-directional**, the receiver can send **data along with acknowledgement** (ACK) in the same frame. This is called pickybacking.

- Piggybacking can save bandwidth because the overhead from a data frame and an ACK frame can be combined into one frame.

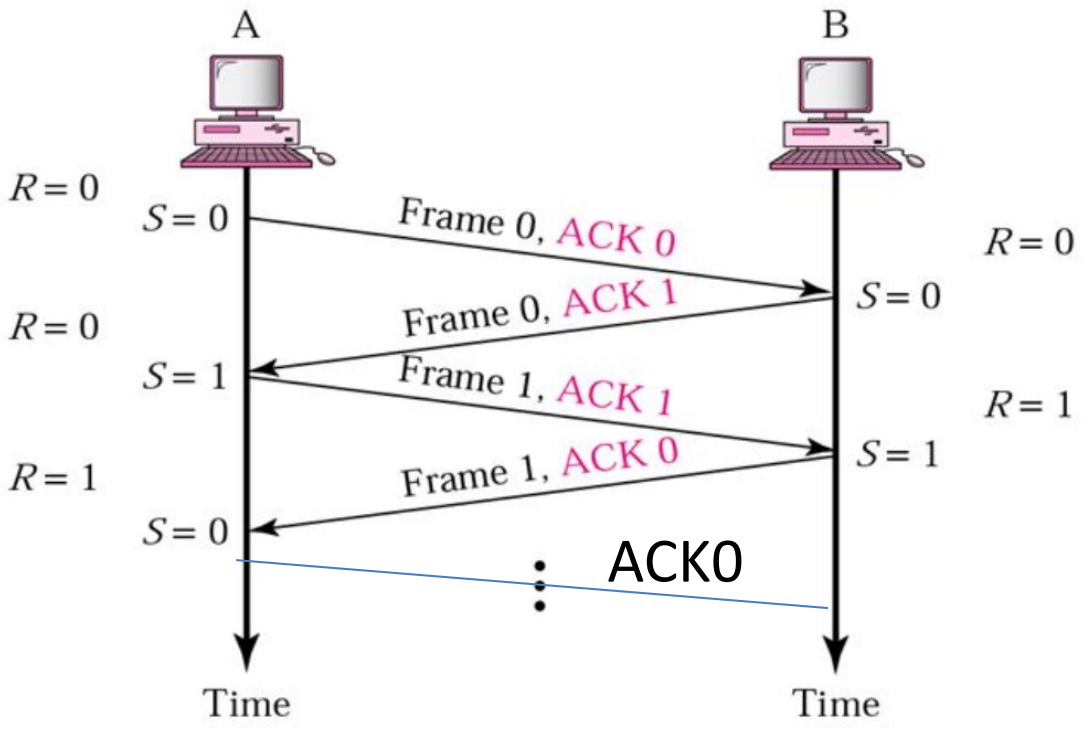

Pipelining

- To increase efficiency, we can **sending multiple frames** in one round.
- Multiple frames should be in transition while waiting for ACK.
  - ✓ It is usually used in the transport layer.
- This process is called pipelining
  - ✓ No pipelining in Stop-and-Wait ARQ

- Two protocols use this pipelining concept:
  - ✓ Go-Back-N ARQ,
  - ✓ Selective Repeat ARQ

Go-Back-N ARQ

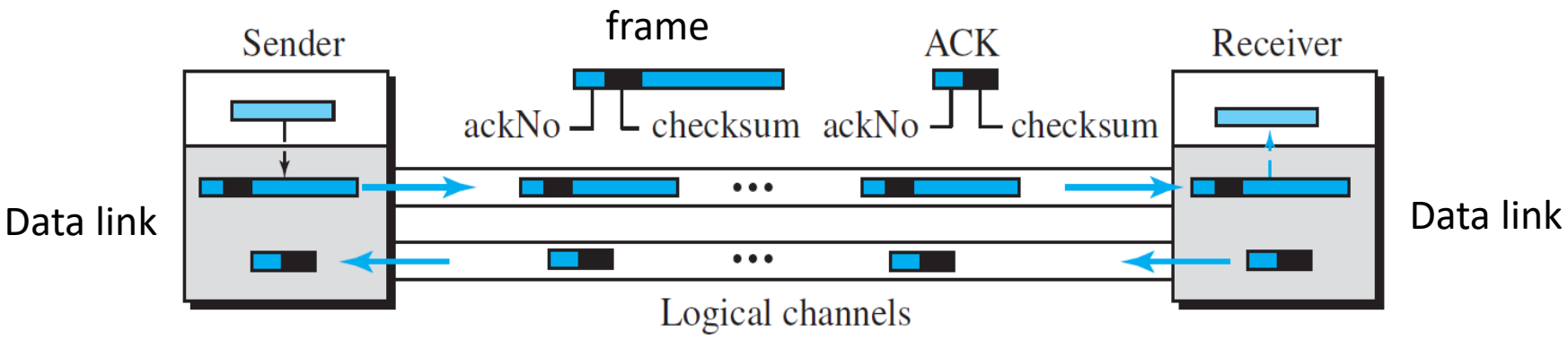

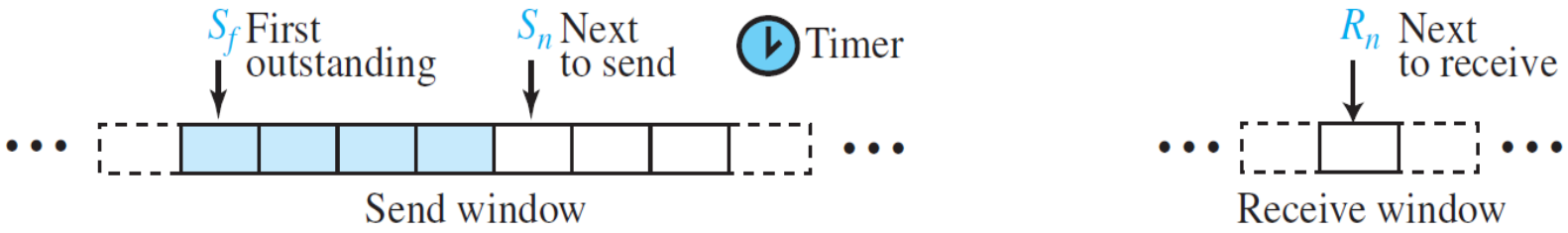

In the Go-Back-*N* protocol, the acknowledgment number is cumulative and defines the sequence number of the next packet expected to arrive.

Go-Back-N ARQ

Send Window

We can send up to W frames before receiving ACKs, and keep a copy of these frames until ACKs arrive.

- Send window

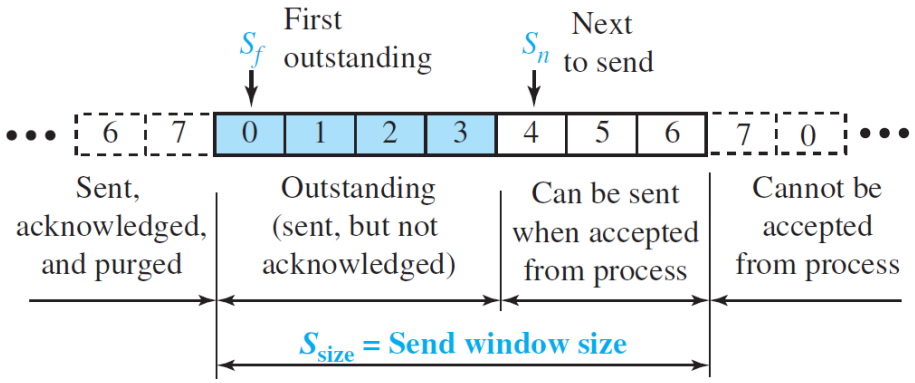

Sequence Numbers

- Frames from a sending station are numbered sequentially
- To include the sequence number (Ns/Nr) of each frame in the header, we need to set a limit
- m bit → 2^m numbers (0 → 2^m -1)
- If m=3: 0, 1, 2, 3, 4, 5, 6, 7, 0, 1, 2, 3, 4, 5, 6, 7
- The size of window is at most 2^m -1

- Sliding send window

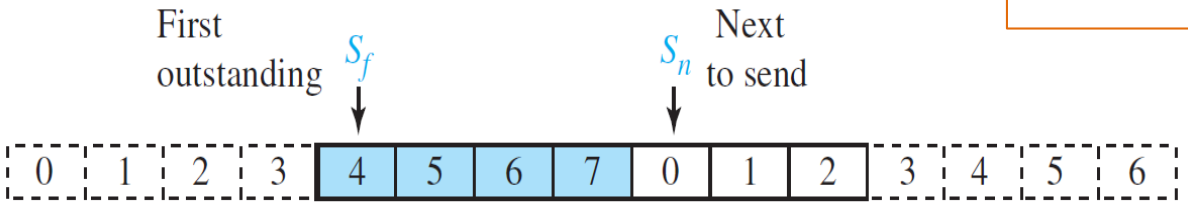

a. Window before sliding

The send window can slide one or more slots when an error-free ACK with ackNo greater than or equal to S_f and less than S_n (in modular arithmetic) arrives.

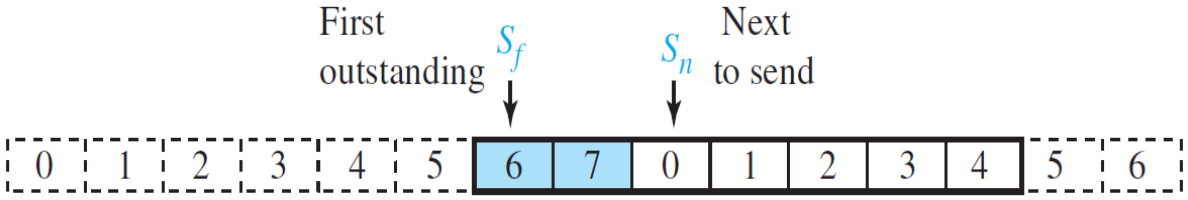

b. Window after sliding (an ACK with ackNo = 6 has arrived)

- To hold the outstanding frames until they are acknowledged,
- We use the concept of a window.
- Outstanding frames are enclosed in a window.

Go-Back-N ARQ

Receive Window

- The receive window makes sure that the correct data frames are received and that the correct acknowledgments are sent.
- In Go-Back-N, the size of the receive window is always **1**.
- The receiver is always looking for the arrival of a specific frame.
- Any frame arriving out of order is discarded and needs to be resent.

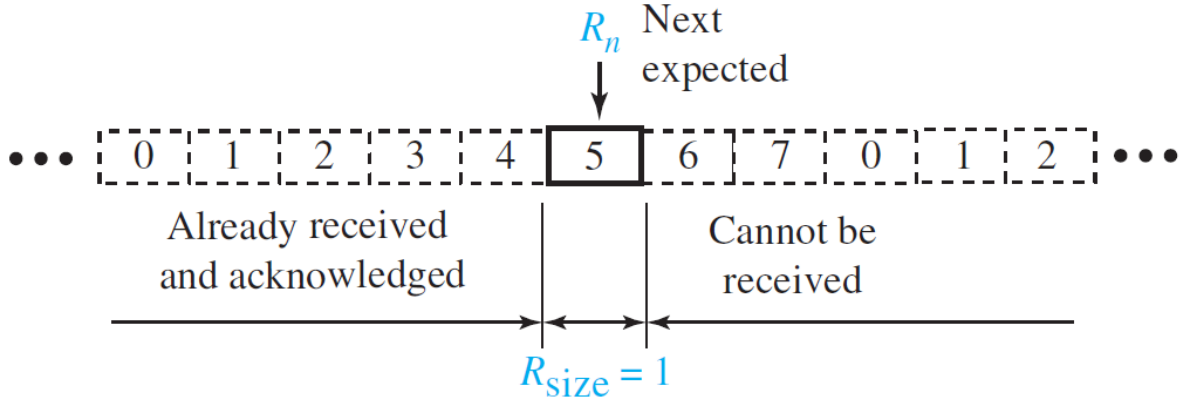

The receive window is an abstract concept defining an imaginary box of size 1 with a single variable R_n. The window slides when a correct packet has arrived; sliding occurs one slot at a time.

Go-Back-N ARQ

Timers, ACK, Resending Frame

- Timers
  - The sender sets a timer for each frame sent
  - The receiver has no timers

- Acknowledgement
  - The receiver sends positive ACKs only if a frame has arrived safe and sound and in order.
  - If the receiver is silent, the timer at the sender will expire, causing resending all frame
  - The receiver does not have to ACK each frame received. It can send one cumulative ACK for several frames

Go-Back-N ARQ

Timers, ACK, Resending Frame

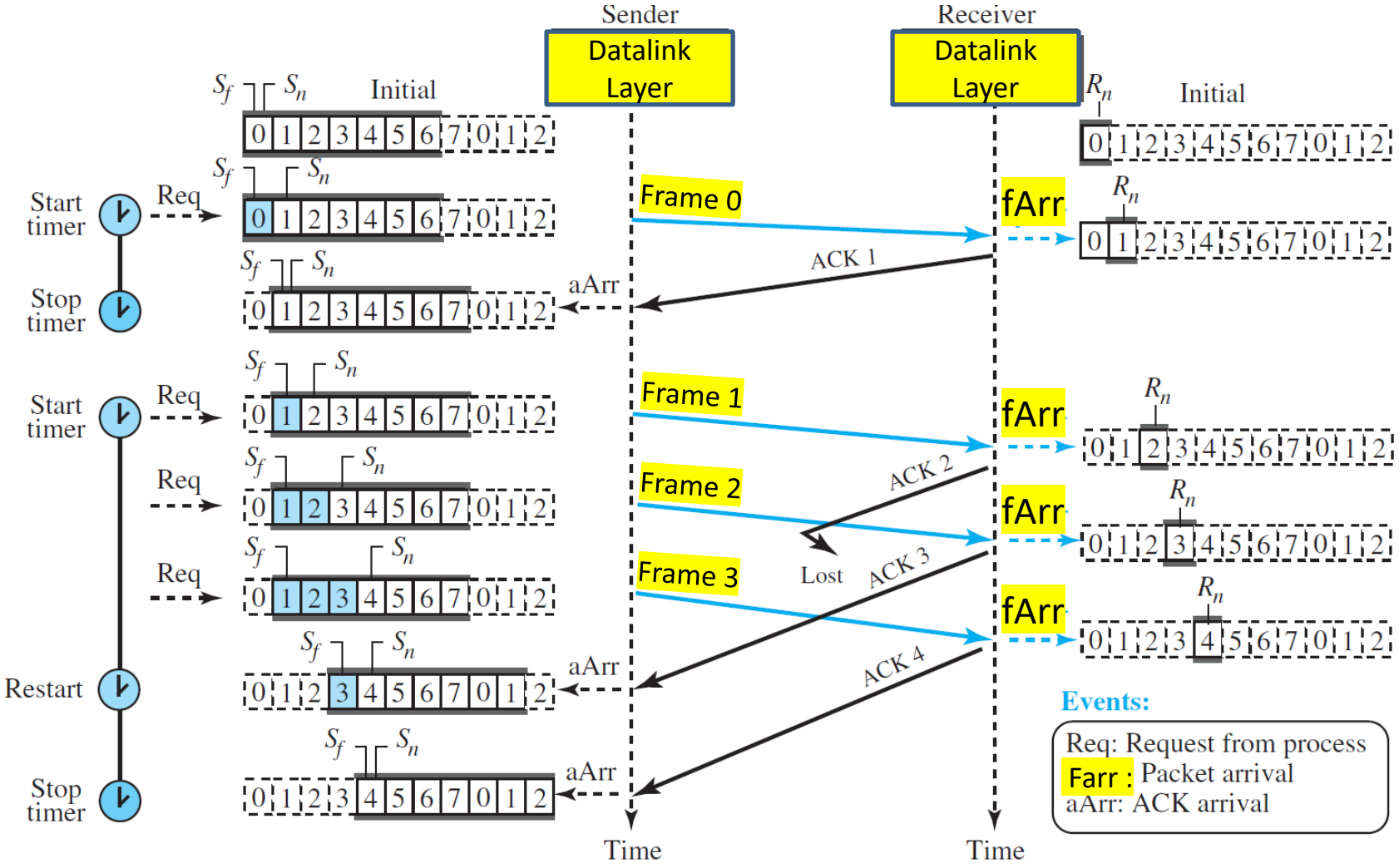

Go-Back-N ARQ

Send Window Size

In Go-Back-N ARQ, the size of the sender window must be less than 2^m;
the size of the receiver window is always 1.

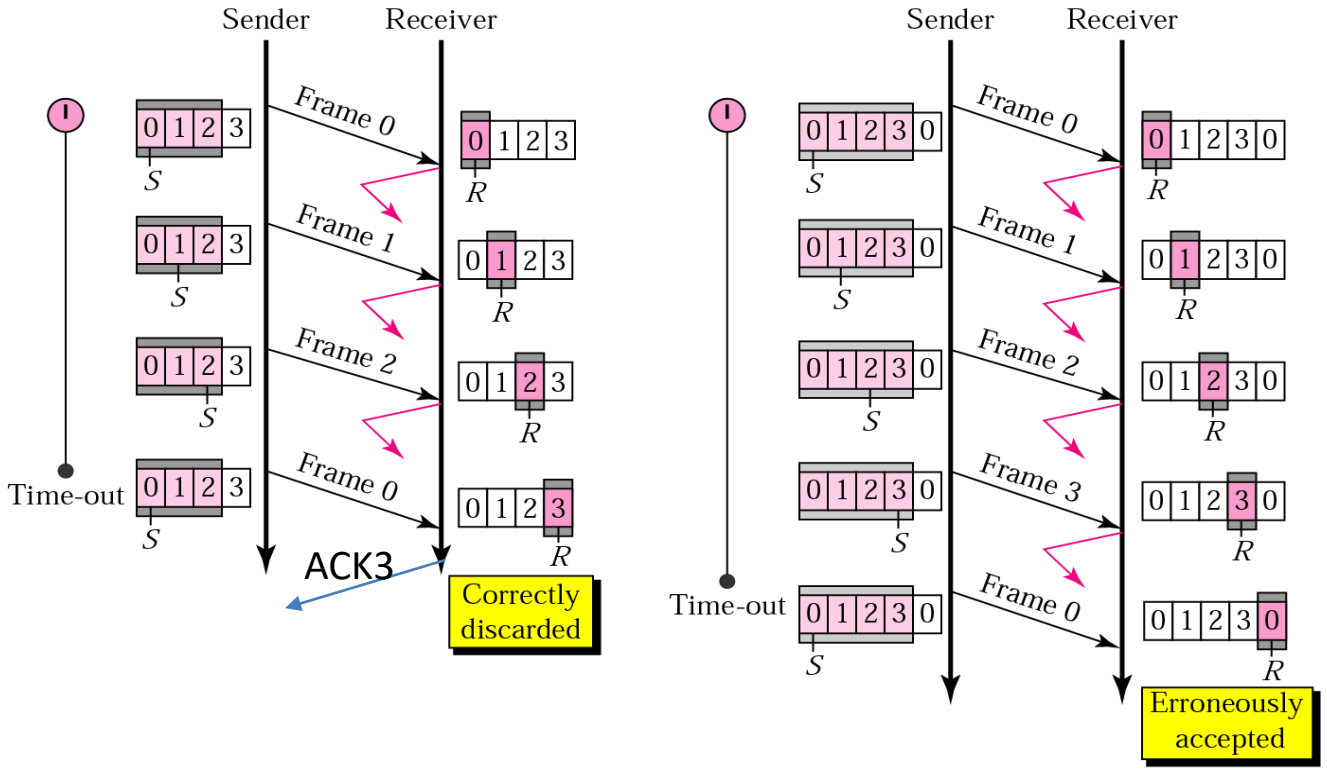

a. Window size < 2^m

b. Window size = 2^m

Go-Back-N ARQ

Normal Operation

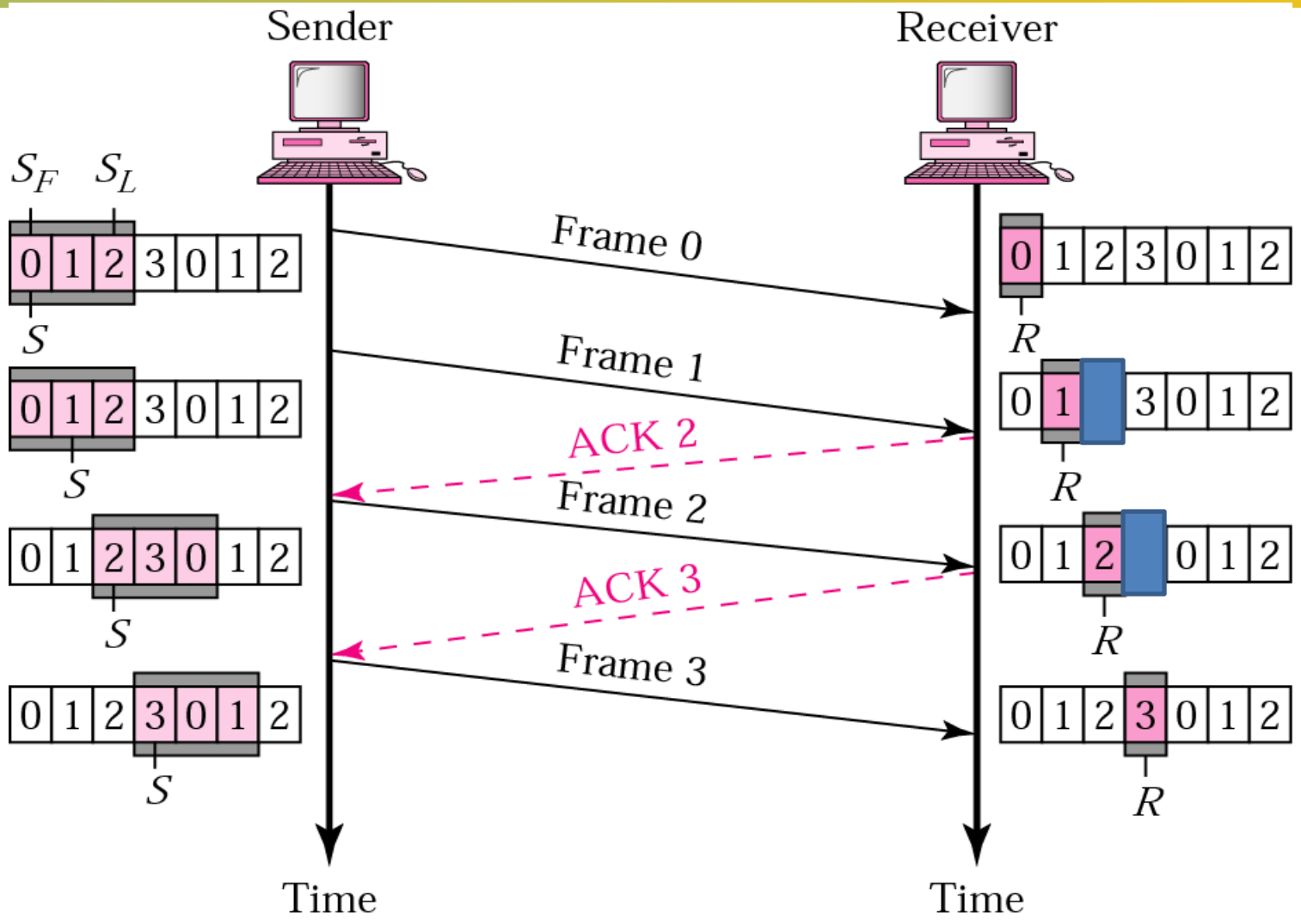

Go-Back-N ARQ

Lost Frame

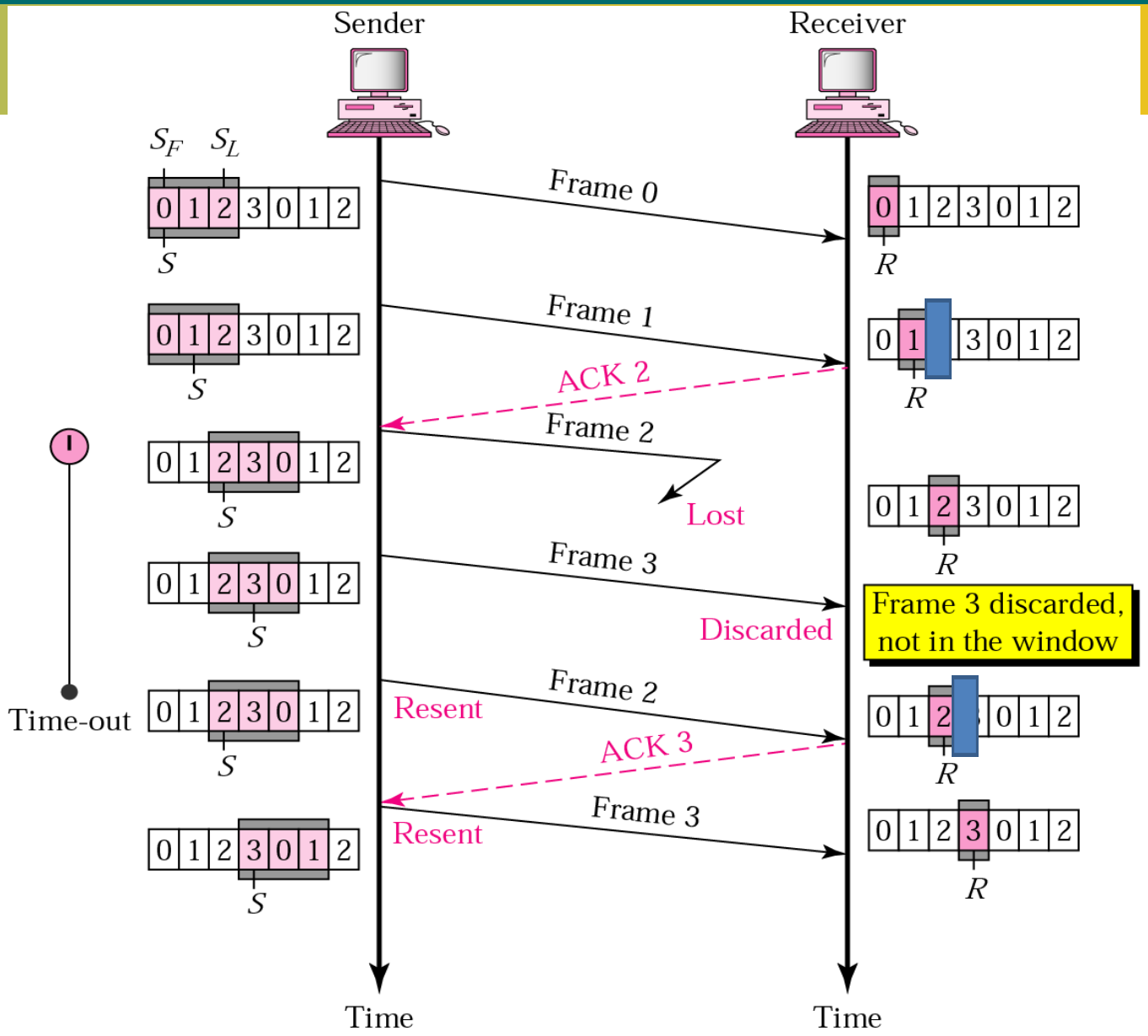

Go-Back-N ARQ

- If an ACK is damaged or lost
  - ✓ If the next ACK arrives before the expiration of any timer, there is no need for retransmission of frame (Cumulative ACK)
    Ex: ACK1, ACK2, ACK3, ACK4

    But ACK3 comes before ACK2
  - ✓ If the next ACK arrives after the time-out, the frame and all the frames are resent
- Note: The receiver never resends an ACK
- **Damaged or Lost Acknowledgement**
  - A delayed ACK also triggers the resending of frames

Go-Back-N ARQ

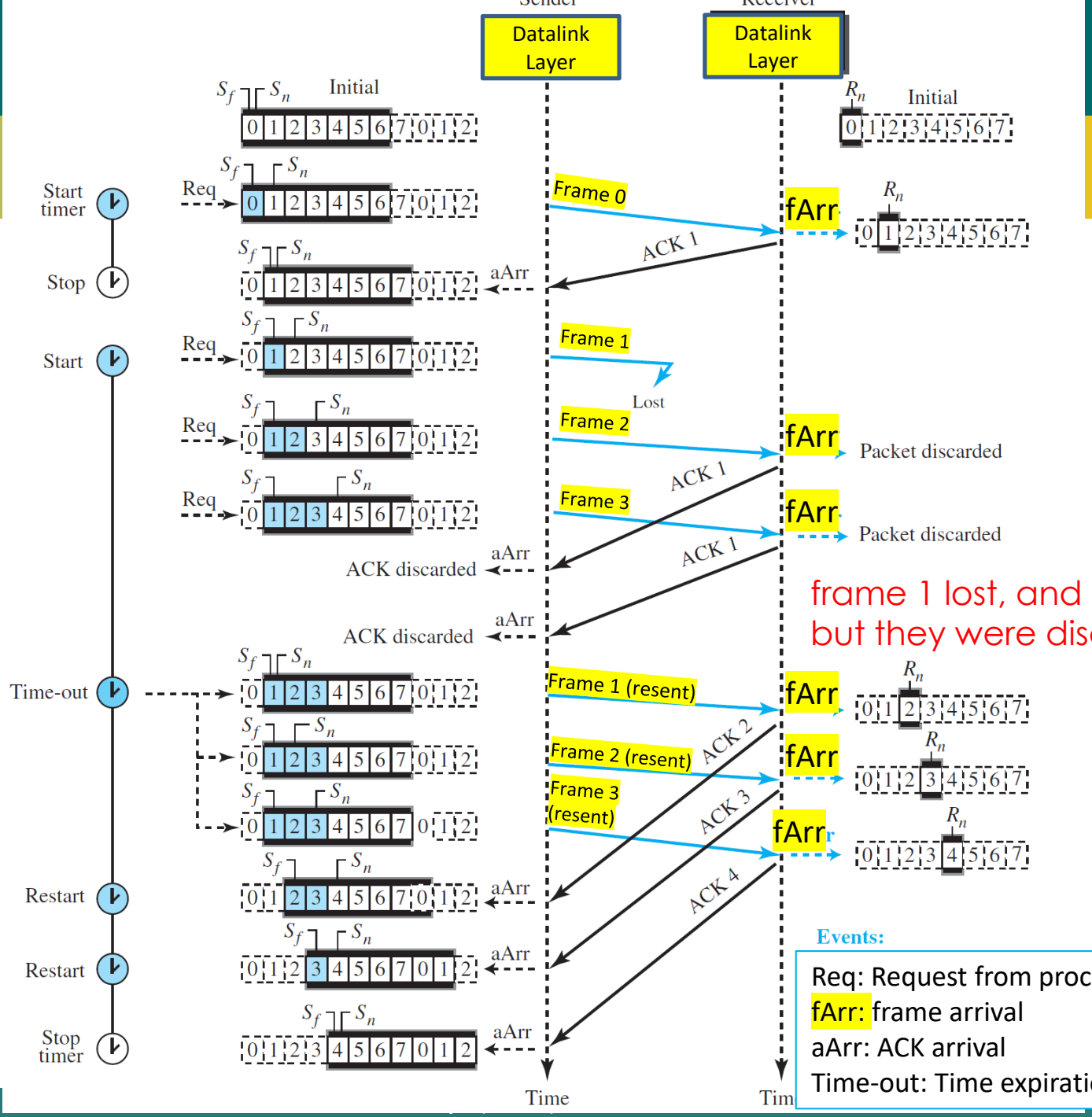

frame 1 lost, and frames 2, 3 arrived
but they were discarded due to out of orde

Events:

Req: Request from process
fArr: frame arrival
aArr: ACK arrival
Time-out: Time expiration

Go-Back-N vs Stop-and-Wait

- The Stop-and-Wait protocol is actually a Go-Back-N protocol in which there are only two sequence numbers and the send window size is 1.

- Stop-and-Wait ARQ and Go-Back-N ARQ can also be bidirectional.
  - ✓ We can also use piggybacking to improve the efficiency of the transmission.
  - ✓ Each direction needs both a sender window and a receiver window.

Go-Back-N ARQ Protocol Limitation

- The Go-Back-N protocol simplifies the process at the receiver. The receiver keeps track of only one variable:
  - ✓ There is **no need to buffer out-of-order frames**; they are **simply discarded.**

- **This protocol is inefficient** if the underlying network protocol loses a lot of frames. **Each time a single frame is lost or corrupted, the sender resends all outstanding frames**, even though some of these frames may have been received safe and sound but out of order.

- If the **datalink layer** is losing many frames because of congestion in the network, **the resending of all of these outstanding frame makes the congestion worse**, and eventually more frames are lost. This has an avalanche effect that may result in the total collapse of the network

Selective-Repeat ARQ Protocol

- **Selective repeat protocol**, also called Selective Repeat ARQ (Automatic Repeat reQuest), is a data link layer protocol that uses sliding window method for reliable delivery of data frames just like Go-Back-N.
- This protocol allows both pipeline transmission of data frames and only the erroneous or lost frames are retransmitted, while the good frames are received and buffered.
- The sender resends only selective frames, those that are actually lost or damaged.

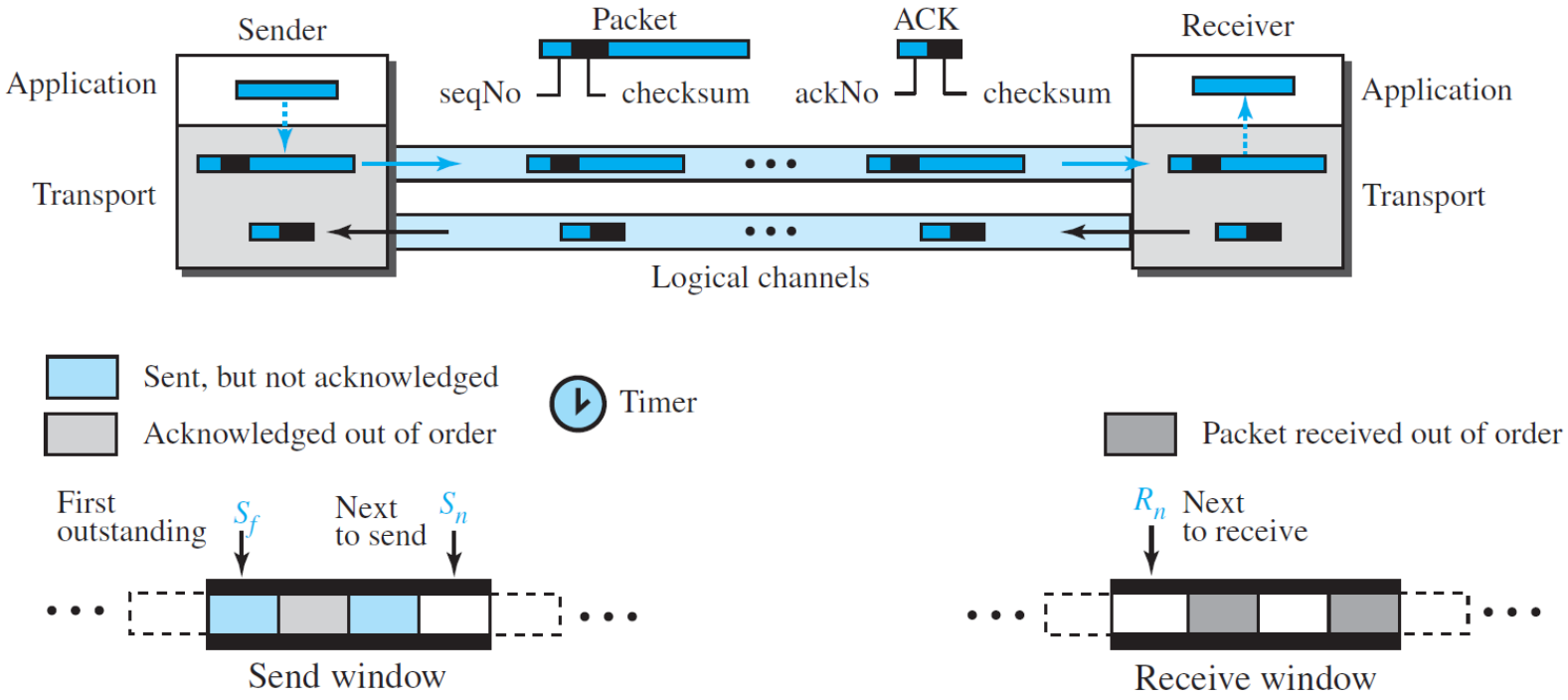

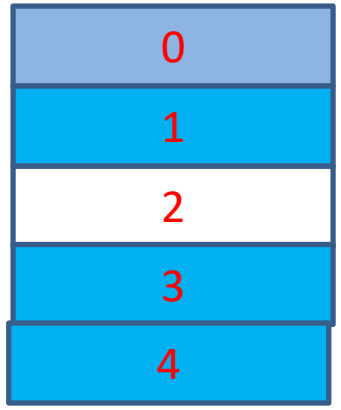

Selective-Repeat ARQ Protocol

Sender and Receiver Windows

- The size of the window should be at most one-half of the value $2^m = 2^{m-1}$
- The receiver window size must also be this size (same size)
- The receiver will look for a range of a sequence number
- Selective Repeat ARQ also defines a negative acknowledgement (NAK) that reports the sequence number of a damaged frame before the timer expires

Selective-Repeat ARQ Protocol

Lost Frame

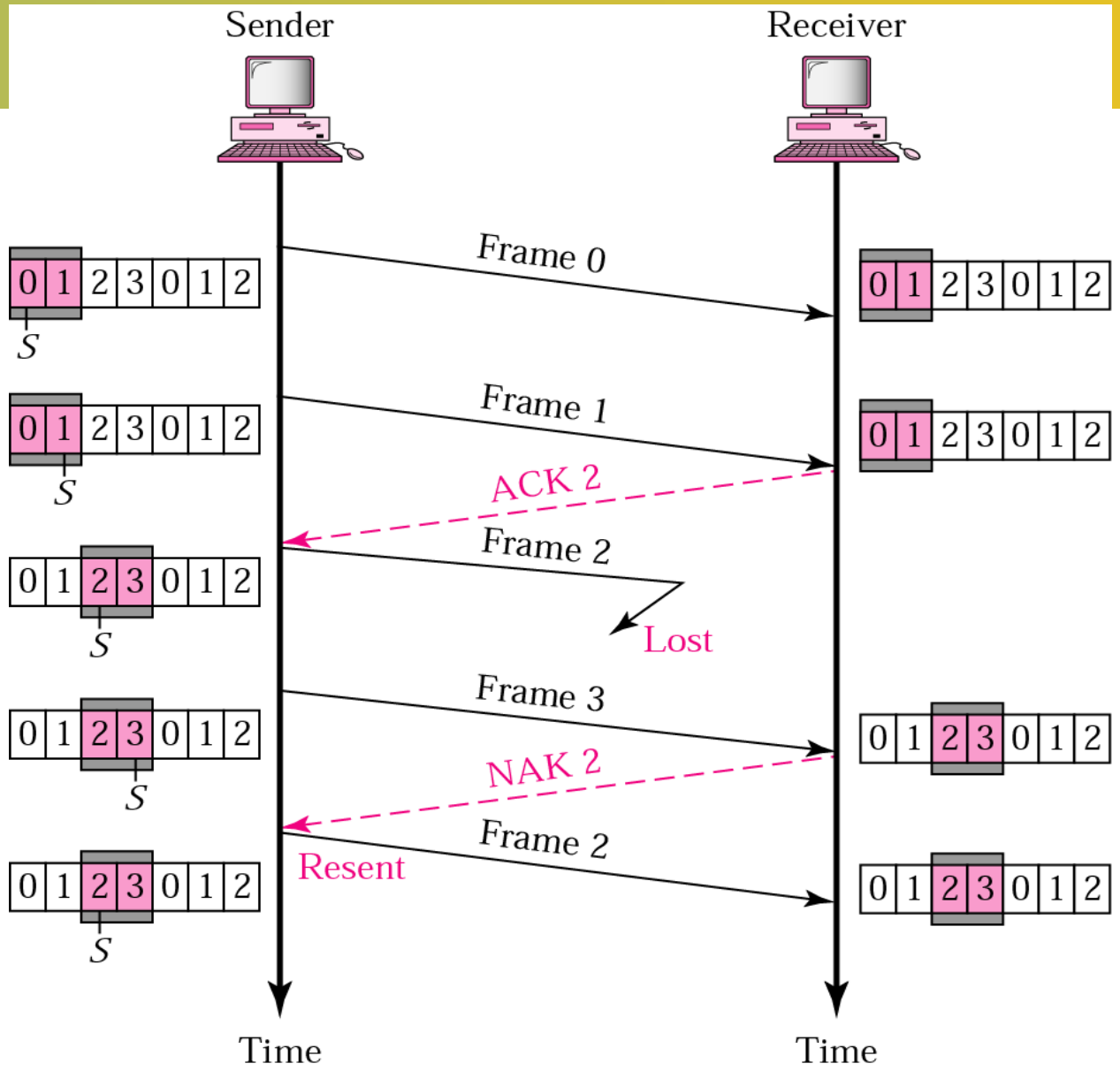

Sender Window Size

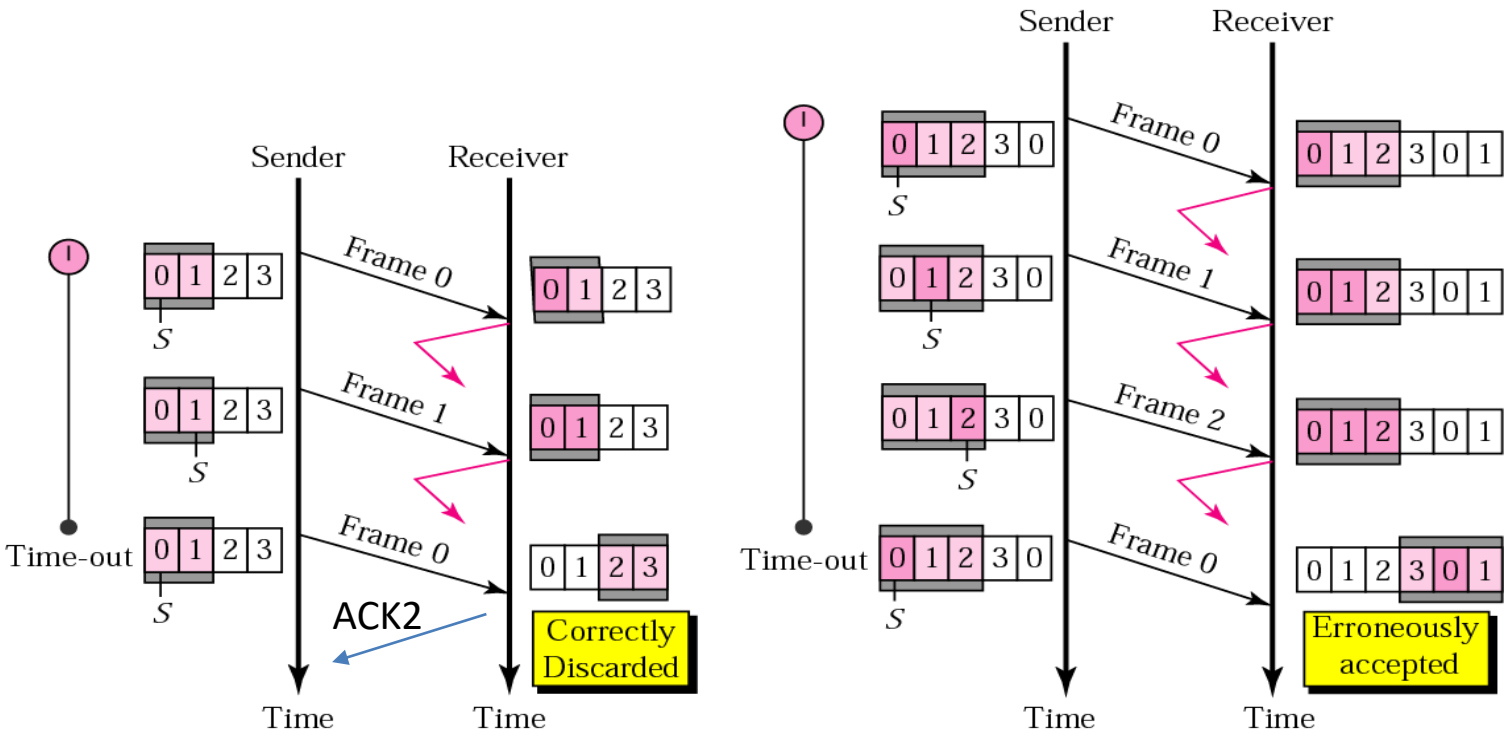

a. Window size = 2^{m-1}

b. Window size > 2^{m-1}

- Why the size of the sender and receiver windows must be at most one-half of 2^m ?
  - ✓ m = 2
  - ✓ Size of window (half) = $2^2 / 2 = 2$
  - ✓ Compare a window size of 2 with a window size of 3

$$2^m/2 = 2^m x 2^{-1} = 2^{m-1}$$

In Selective-Repeat, the size of the sender and receiver window can be at most one-half of 2^m.

Selective-Repeat ARQ Protocol

Timer

- Theoretically, Selective-Repeat uses one timer for each outstanding frame. When a timer expires, only the corresponding frame is resent. In other words, Go-Back-N (GBN) treats outstanding frames as a group;

- Selective-Repeat (SR) treats them individually. However, most data-link-layer protocols that implement SR use only a single timer. For this reason, we use only one timer.

In the Selective-Repeat protocol, an acknowledgment number defines the sequence number of the error-free packet received.

Selective-Repeat ARQ Protocol: Time Sequence Flow Diagram

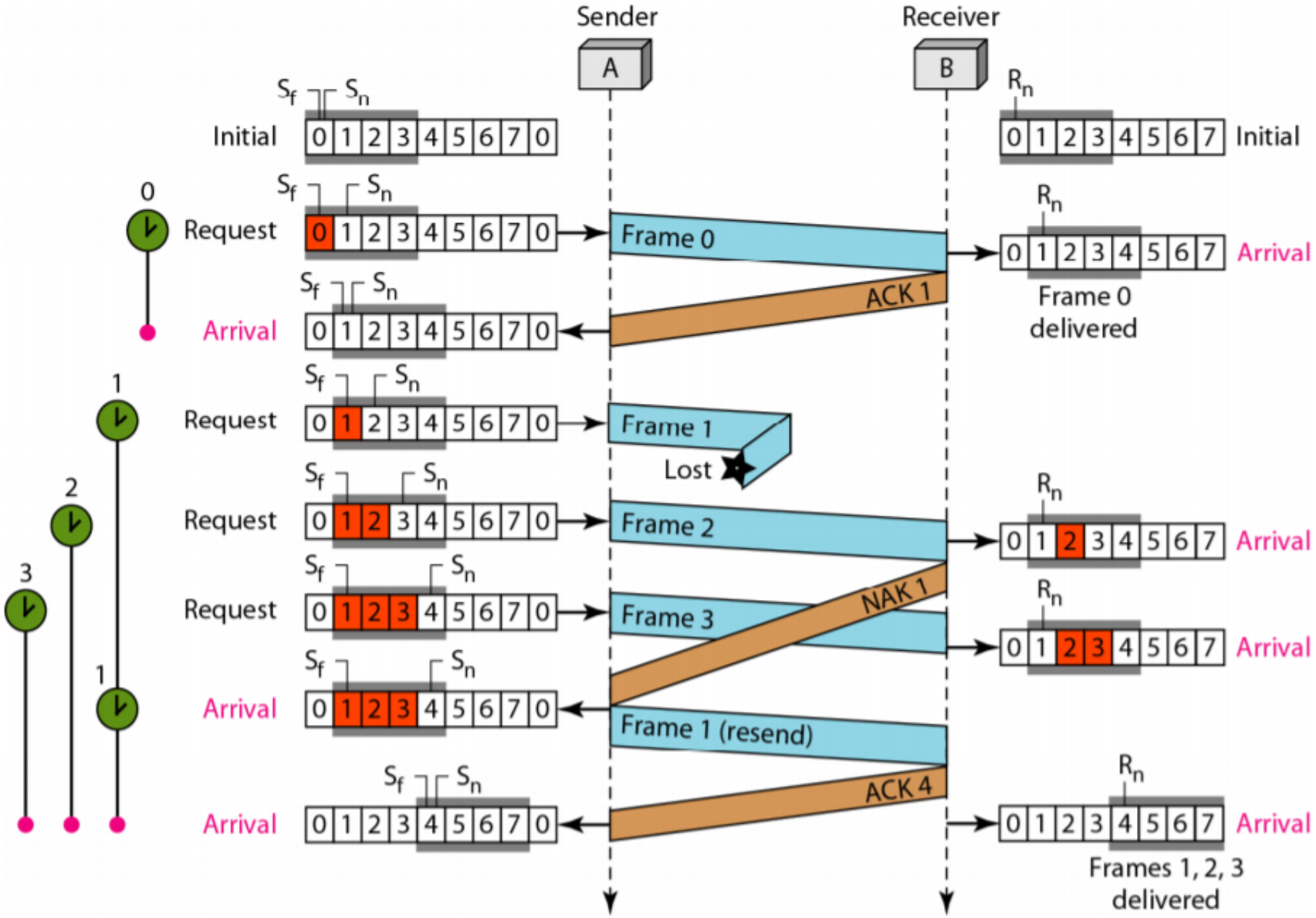

HDLC

Some slides from
- ITCS323/2021s1
- NETACAD Network Essentials/ITN7.02

HDLC

- High-level Data Link Control (HDLC) is an actual protocol designed to support both half-duplex and full-duplex communication over point-to-point and multipoint links
- It implements the ARQ mechanisms
- **Configurations and Transfer Modes**
  - NRM: Normal Response Mode
  - ABM: Asynchronous Balanced Mode

NRM (Normal Response Mode)

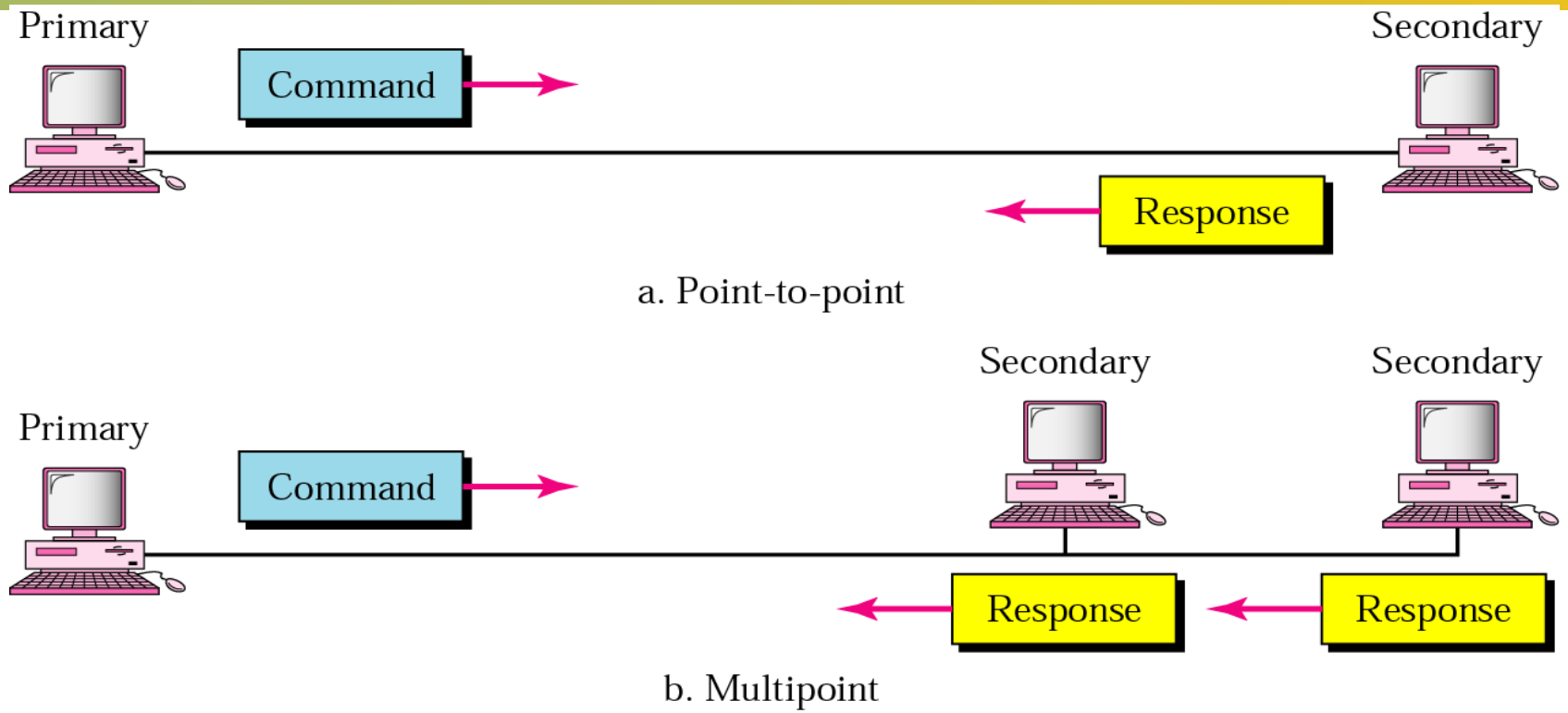

- The station configuration is unbalanced.
  - A primary station can send commands
  - A secondary station can only respond.
- NRM is used for both point-to-point and multiple-point links.

ARM (Asynchronous Response Mode)

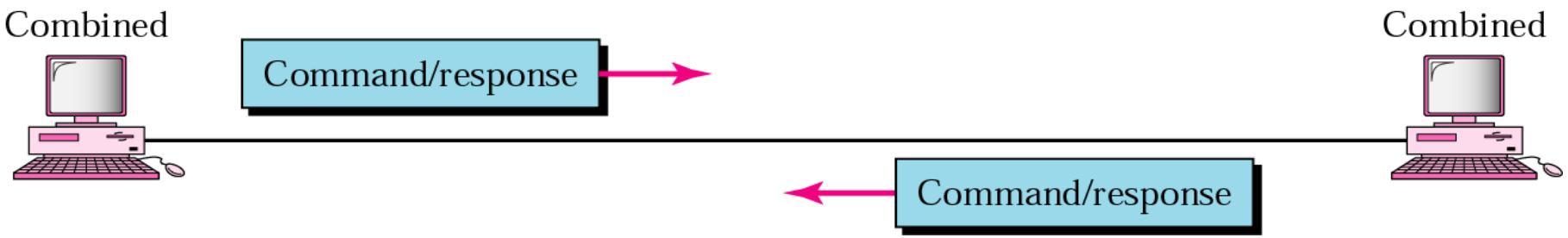

- The station configuration is balanced.
- The link is point-to-point, and each station can function as a primary and a secondary.

Frame Format (1/2)

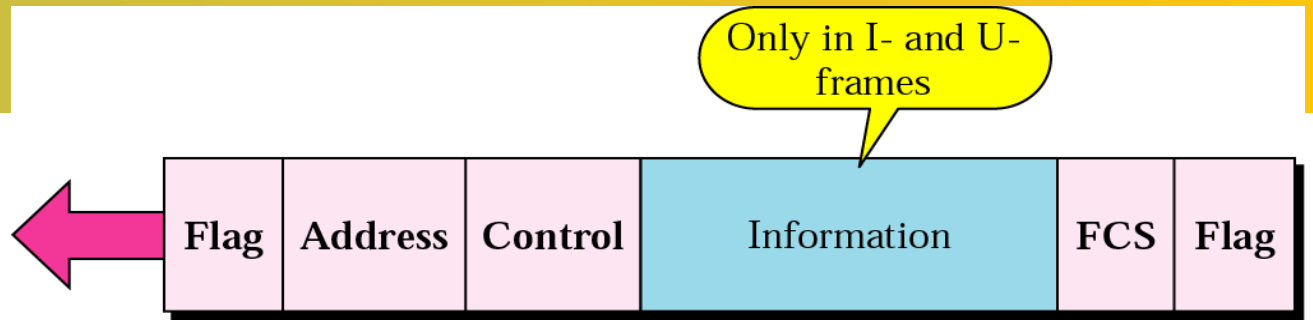

- Each frame in HDLC may contain up to six fields
- In multiple-frame transmissions, the ending flag of one frame can serve as the beginning flag of the next frame
- Flag Field
  - for synchronizing
  - 8-bit sequence with a bit pattern 01111110
  - Identifies both the beginning and end of frame
- Address Field
  - Can be 1 or more bytes long depends on network
    - 1 byte → 128 stations
  - If primary station creates a frame
    - Address = To address
  - If secondary creates a frame
    - Address = From address

Frame Format (2/2)

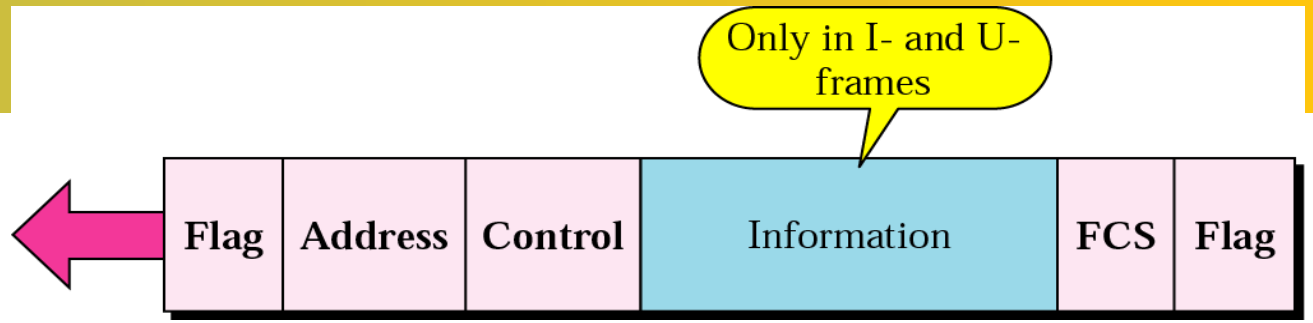

- Control Field
  - ✓ 1- or 2-byte segment of the frame used for flow and error control
- Information Field
  - ✓ Contains the user's data from the network layer or network management info
  - ✓ The length is always fixed within each network
- FCS Field: Frame Check Sequence
  - ✓ Is HDLC's error detection
  - ✓ Can contain either a 2- or 4-byte ITU-T CRC

Frame Types

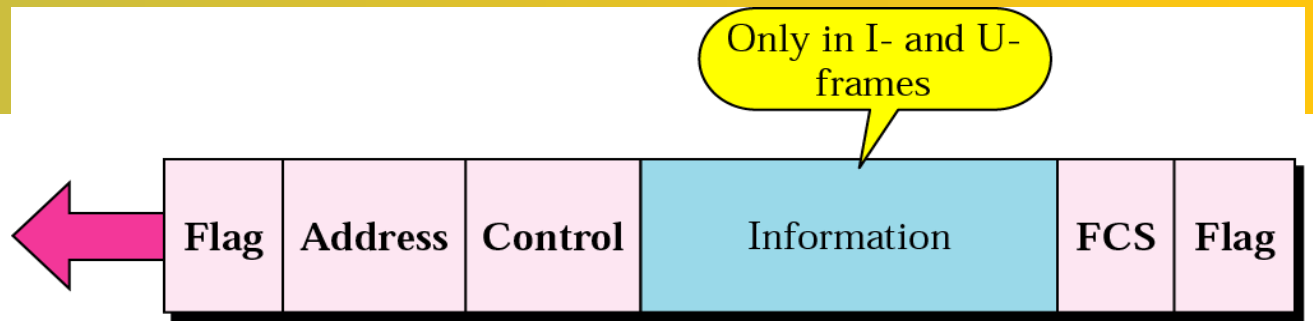

- Information frames (I-frames)
  - To transport user data and control info relating to user data (piggybacking)
- Supervisory frames (S-frames)
  - Only to transport control info
- Unnumbered frames (U-frames)
  - Reserved for system management

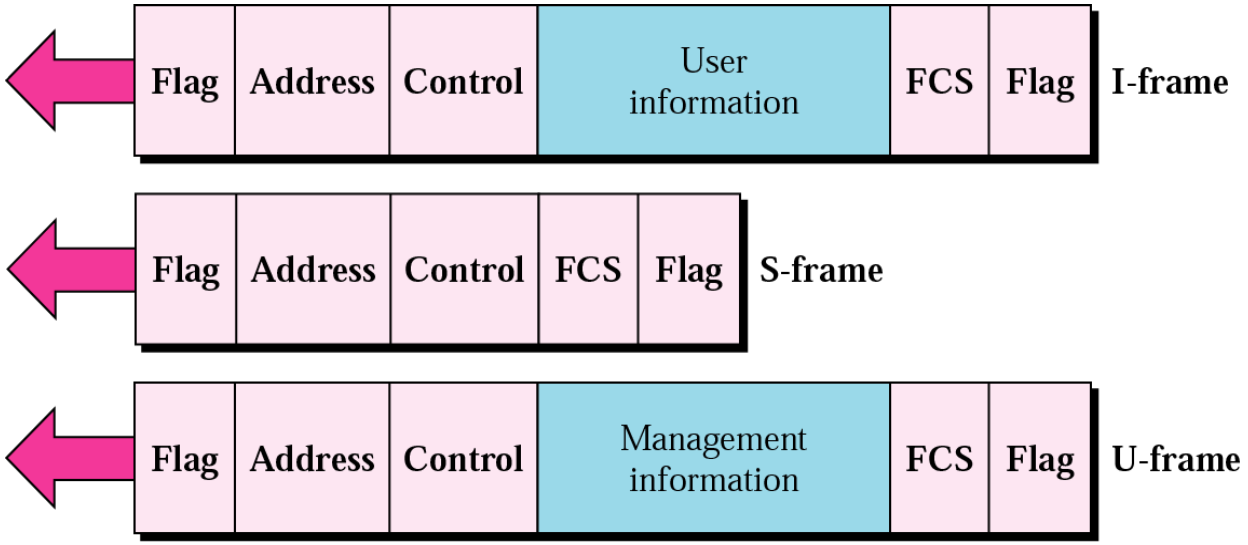

I Frame

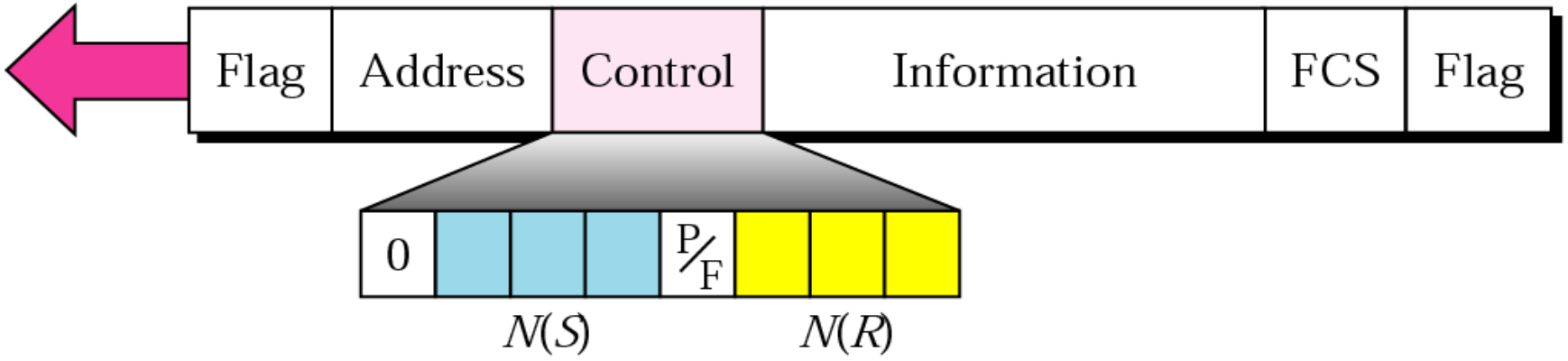

- The first bit of control field is 0 !
- P/F: Poll and Final
  - 0 is Poll, when the frame is sent by primary to secondary
  - 1 is Final, when the frame is sent by secondary to primary
- N(S): the sequence number of the frame in travel
- N(R): the value of the ACK when piggybacking is used

S Frame

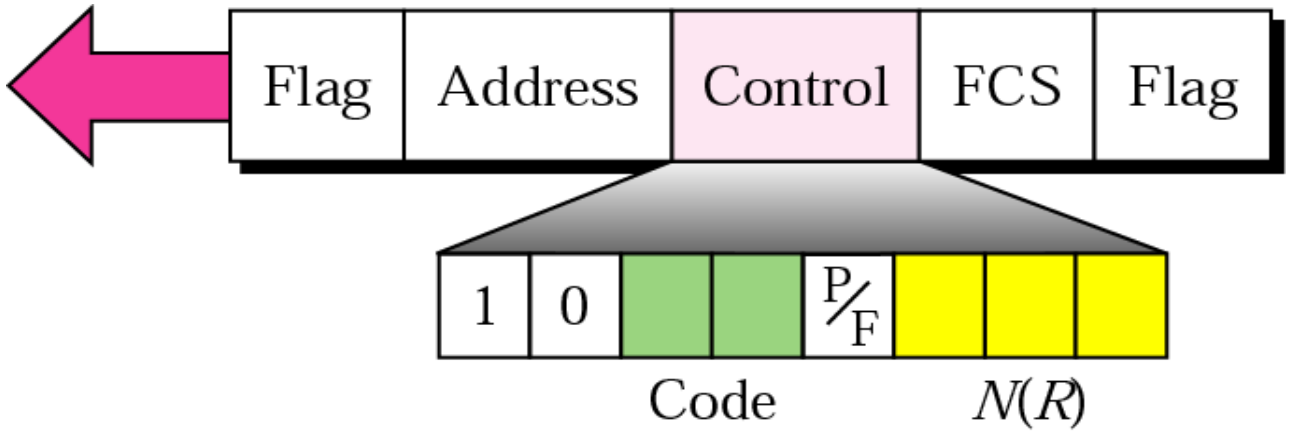

- Used for flow and error control, whenever piggybacking is either impossible or inappropriate
- The first 2 bits of the control field are 10
- N(R): correspond to ACK or NAK

Code
- ✓00: Receiver ready (RR)
  ACK with safe and sound
- ✓01: Receiver not ready (RNR)
  ACK but the receiver is busy and cannot receive more frames (please slow down)
- ✓10: Reject (REJ)
  NAK that can be used in Go-Back-N ARQ
  The last frame is lost or damaged
- ✓11: Selective reject (SREJ)
  NAK used in Selective Repeat ARQ

U Frame

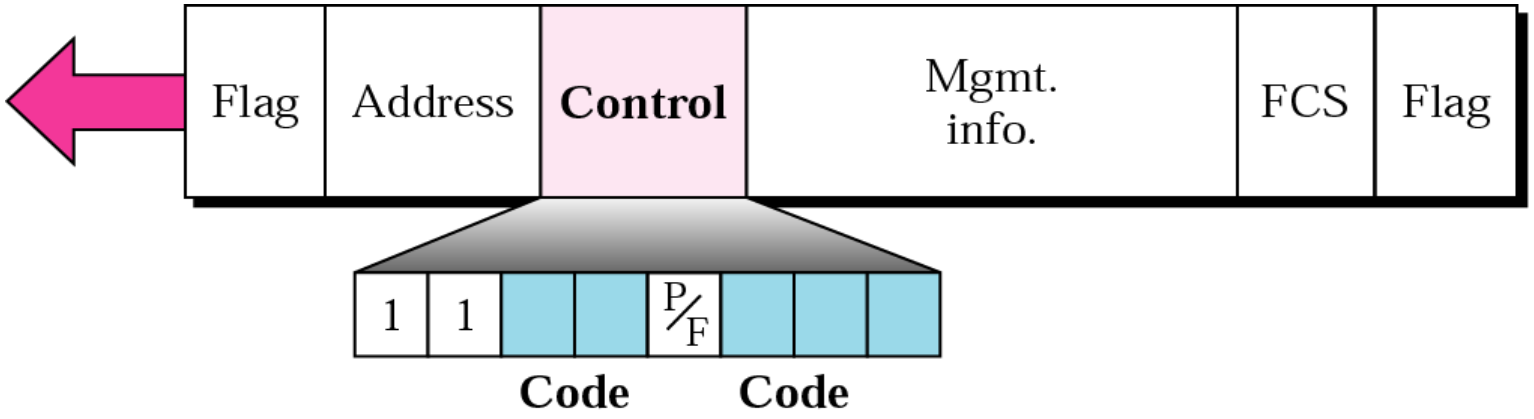

- Used to exchange session management and control information between connected devices
- Contains an info field for system management
- U-frame codes are divided into 2 sections:
  - ✓2-bit prefix before P/F bit
  - ✓3-bit prefix after P/F bit

Code		Command	Response
00	001	SNRM	
11	011	SNRME	
11	100	SABM	DM
11	110	SABME	
00	000	UI	UI
00	110		UA
00	010	DISC	RD
10	000	SIM	RIM
00	100	UP	
11	001	RSET	
11	101	XID	XID
10	001		FRMR

HDLC

U Frame

Command/response	Meaning
SNRM	Set normal response mode
SNRME	Set normal response mode (extended)
SABM	Set asynchronous balanced mode
SABME	Set asynchronous balanced mode (extended)
UP	Unnumbered poll
UI	Unnumbered information
UA	Unnumbered acknowledgment
RD	Request disconnect
DISC	Disconnect
DM	Disconnect mode
RIM	Request information mode
SIM	Set initialization mode
RSET	Reset
XID	Exchange ID
FRMR	Frame reject

Connection Establishment

Connection Release

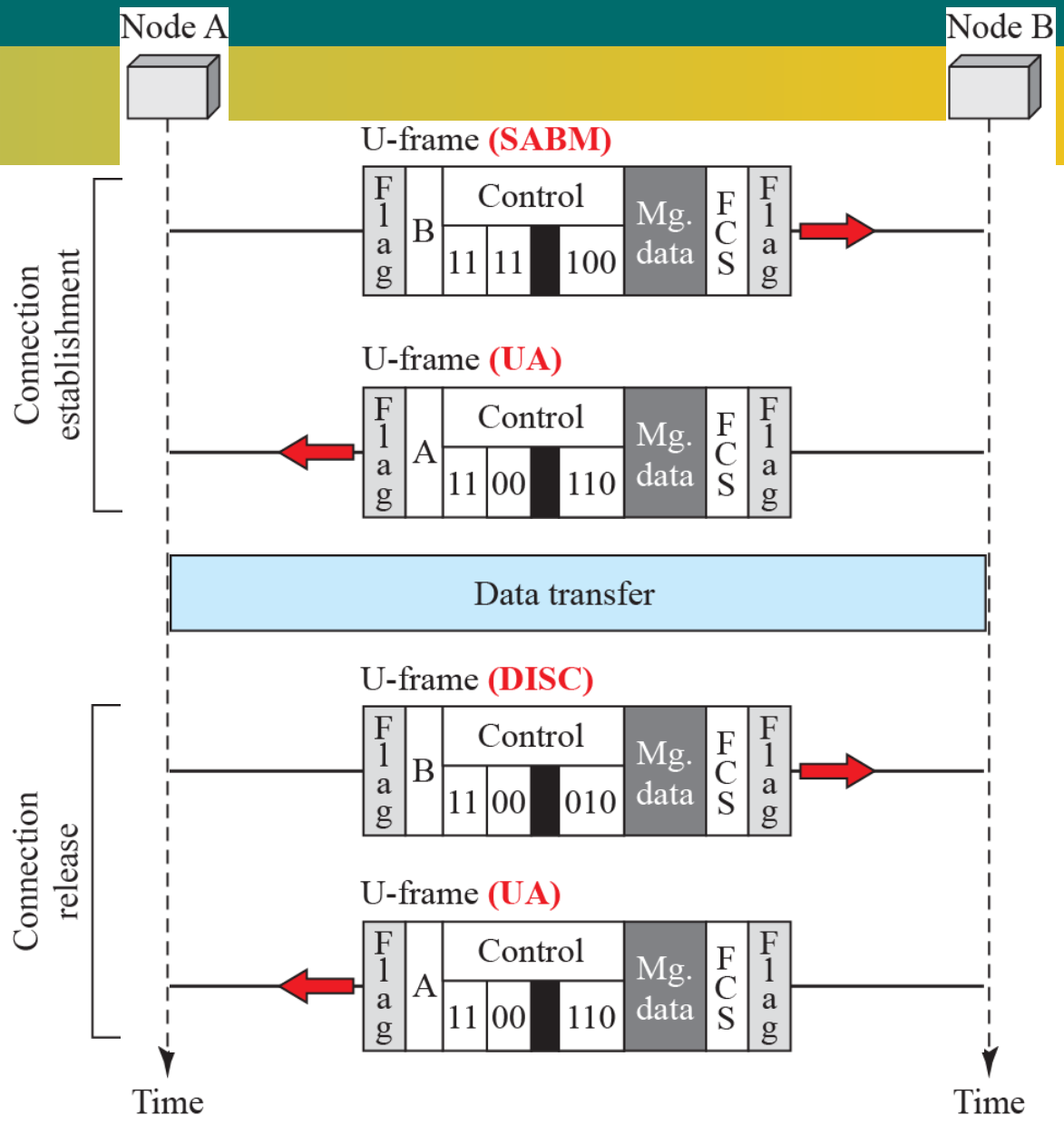

HDLC: Go-Back-N

Pickybacking without Error

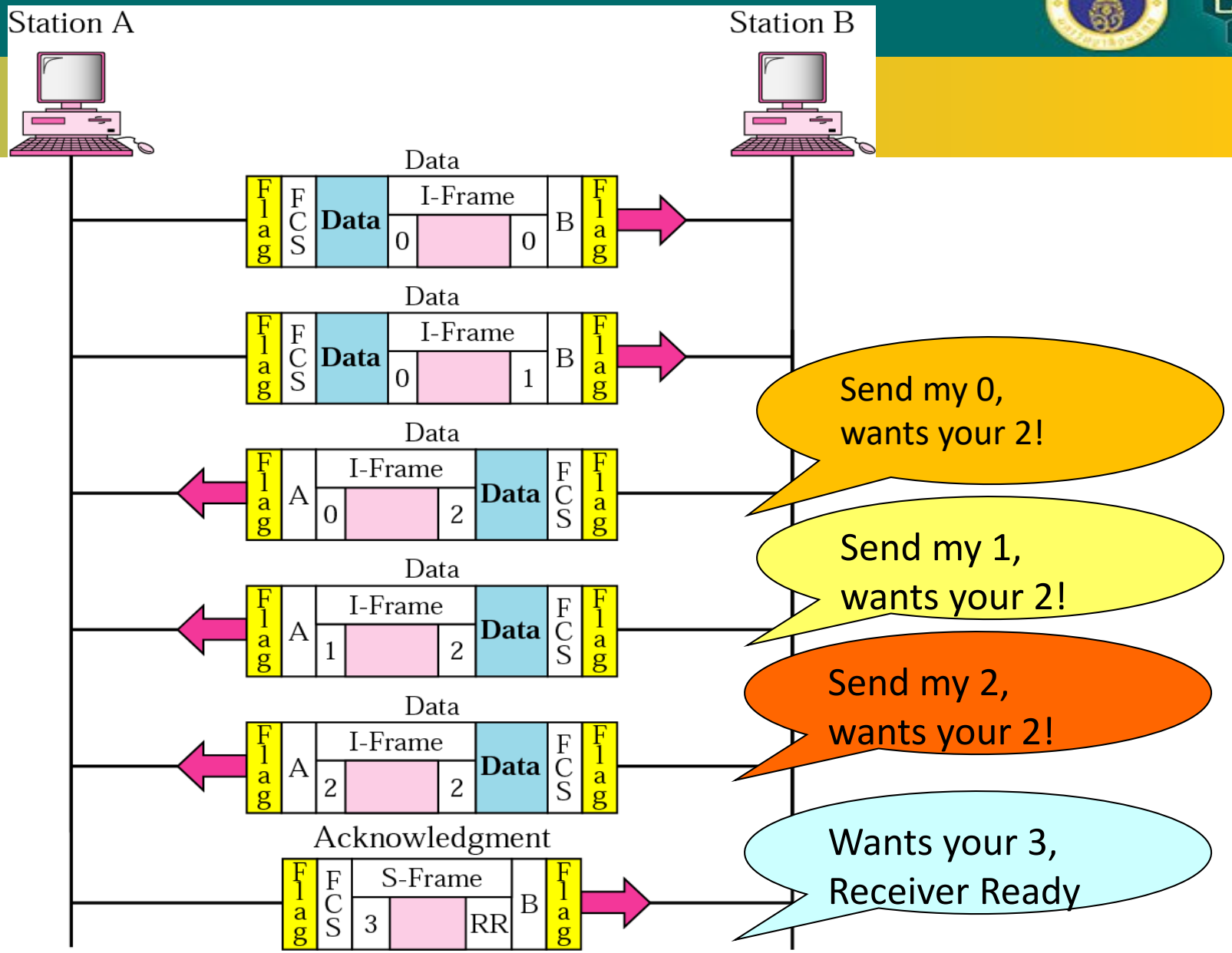

HDLC: Go-Back-N

Pickybacking with Error

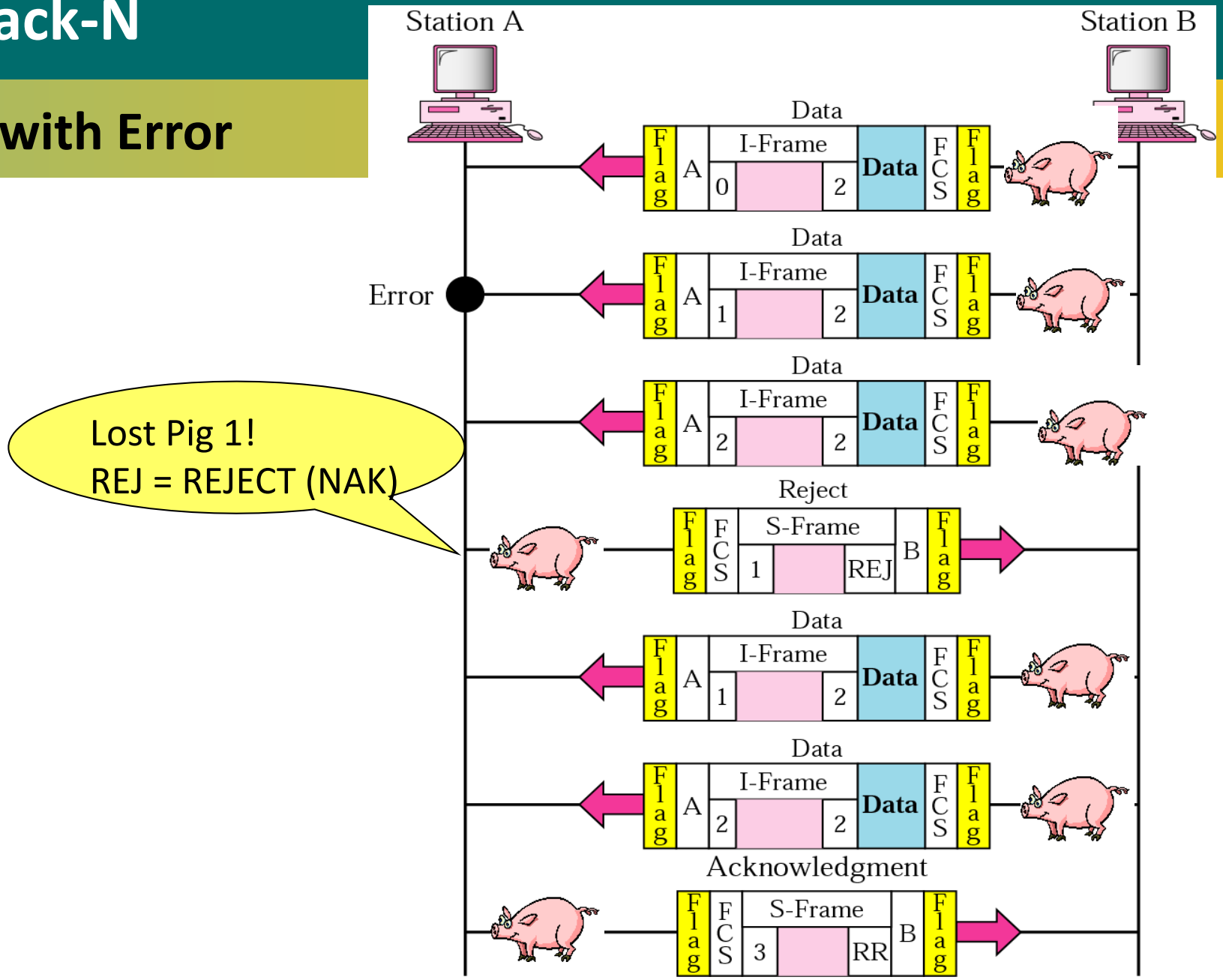

Performance

Stop-and-Wait ARQ

If the distance is 1000 m, and the propagation speed = 500 m/sec → 2*1000/500 = 4 seconds. Ignore the transmission delay.

If a frame is 100 bits, and we want to transmit total data of 1000 bits.

- What is the total time you have to spend by sending this data?

  → 10 frames = 40 sec

Performance

Go-Back-N ARQ

If the distance is 1000 m, and the propagation speed = 500 m/sec →
2*1000/500 = 4 seconds. Ignore the transmission delay.

If a frame is 100 bits, and we want to transmit total data of 1000 bits.

You can send 2 frames at the same time (N)

- What is the total time you have to spend by sending this data?

  → 10 frames = 5 times * 4 = 20 sec

Bandwidth-Delay Product

- A measure of the efficiency of an ARQ system is the product of
  - ✓ the bandwidth (in bps) and
  - ✓ the round-trip delay (in seconds)

- If the delay is long, the sender can also exhaust its window while waiting

- The bandwidth-delay product is a measure of the number of bits we can send out of our system while waiting for ACKs for the receiver.

Example

In a Stop-and-Wait ARQ system, the bandwidth of the line is 1 Mbps, and 1 bit takes 20 ms to make a round trip. What is the bandwidth-delay product? If the system data frames are 1000 bits in length, what is the utilization percentage of the link?

Solution

The bandwidth-delay product is

$$1 \times 10^6 \times 20 \times 10^{-3} = 20{,}000 \text{ bits}$$

The system can send 20,000 bits during the time it takes for the data to go from the sender to the receiver and then back again. However, the system sends only 1000 bits. We can say that the link utilization is only 1000/20,000, or 5%. For this reason, for a link with high bandwidth or long delay, use of Stop-and-Wait ARQ wastes the capacity of the link.

Go-Back-N ARQ

Example

- What is the utilization percentage of the link in Example 5 if the link uses Go-Back-N ARQ with a 15-frame sequence?

Solution

The bandwidth-delay product is still 20,000. The system can send up to 15 frames or 15,000 bits during a round trip. This means the utilization is 15,000/20,000, or 75 percent. Of course, if there are damaged frames, the utilization percentage is much less because frames have to be resent.

Summary

- In the selective repeat request ARQ, if you have 4 bits,
- the total sequence number = 2^4 = 16 ==> 0 til 15.
- And the window size will be half of this size = 2^4 / 2 = 8 for both sender and receiver sides.
- (It will always be the even number!!)

- However, if Go-Back-N ARQ, the window size at the receiver will be 1,
  and the window size at the sender will be 2^m - 1 = 16-1 = 15
- (It will always be the odd number!!)

- In both ARQs, if we send 20 packets without any loss,
- the sequence number will be in this order: 0,1,2,3,4,5,6,7,8,9,10,11,12,13,14,15,0,1,2,3